SINGLE HUNG ELEVATION (NON-IMPACT)

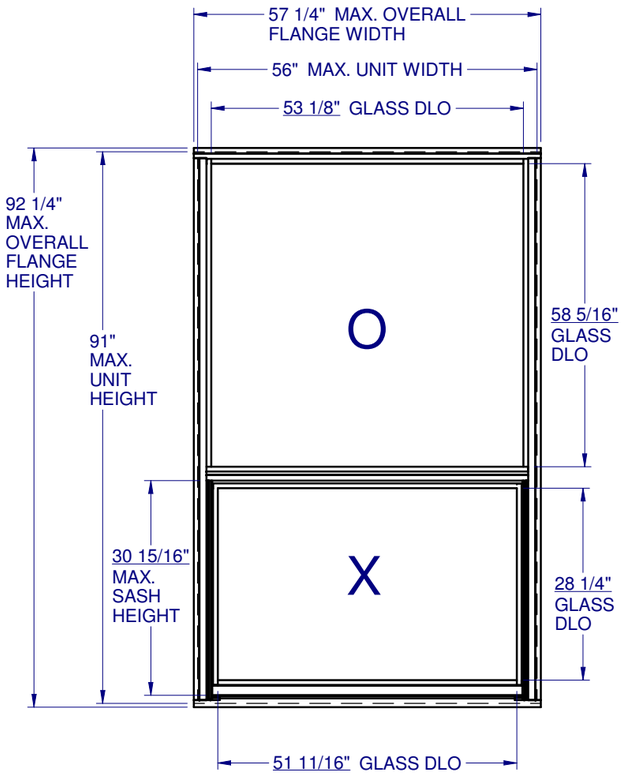

ORIEL
SEE NOTE 10

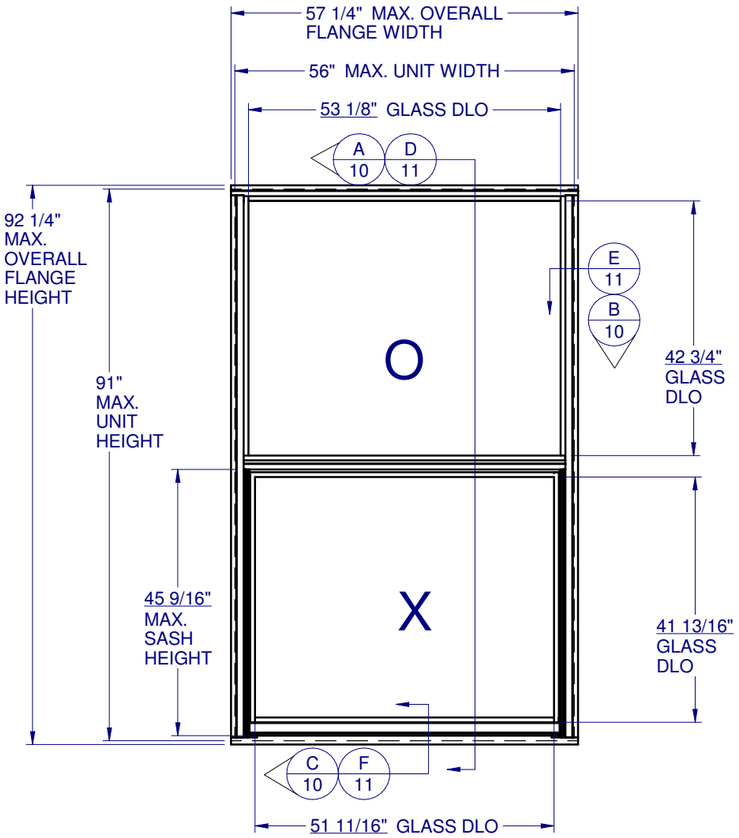

EQUAL SPLIT
SEE NOTE 11

GENERAL NOTES:

1. THE PRODUCT SHOWN HEREIN IS DESIGNED AND MANUFACTURED TO COMPLY WITH THE FLORIDA BUILDING CODE (FBC), CURRENT EDITION.
2. GLAZING OPTIONS: (SEE SHEET 2)
3. CONFIGURATIONS: "O/X".
4. DESIGN PRESSURE RATING (SEE SHEETS 3-5):
   -NEGATIVE DESIGN LOADS BASED ON TESTED PRESSURE AND GLASS TABLES ASTM E-1300-04.
   -POSITIVE DESIGN LOADS BASED ON TESTED PRESSURE, WATER INFILTRATION TEST PRESSURE AND GLASS TABLES ASTM E-1300-04.
5. ANCHORAGE: THE 33 1/3% STRESS INCREASE HAS NOT BEEN USED IN THE DESIGN OF THIS PRODUCT. SEE SHEETS 10-12 FOR INSTALLATION DETAIL. WIND LOAD DURATION FACTOR Cd=1. WAS USED FOR WOOD ANCHOR CALCULATIONS.
6. NOT APPROVED FOR IMPACT RESISTANCE. IMPACT PROTECTIVE SYSTEM IS REQUIRED IN WIND BORNE DEBRIS REGION.
7. ALL FRAMES SCREWED TOGETHER. SMALL JOINT SEAM SEALANT USED AT ALL FRAME JOINTS.
8. SERIES / MODEL DESIGNATION SH-3500.
9. THE DESIGNATION X AND O STAND FOR THE FOLLOWING: X = OPERABLE SASH, O = FIXED SASH.
10. ORIEL UNITS AS SHOWN UP TO 56" x 91" ARE RATED ±35 PSF. FOR DESIGN PRESSURES OF VARIOUS SIZES BASED ON QUALIFIED GLASS TYPES, SEE COMPARATIVE ANALYSIS. REFER TO SHEETS 5 & 9.
11. EQUAL UNITS AS SHOWN UP TO 56" x 91" ARE RATED ±35 PSF. FOR DESIGN PRESSURES OF VARIOUS SIZES BASED ON QUALIFIED GLASS TYPES, SEE COMPARATIVE ANALYSIS. REFER TO SHEETS 3, 4 & 8.
12. SECTION CALLOUTS FROM ELEVATIONS APPLY TO ALL ELEVATIONS IN A SIMILAR LOCATION.

TABLE OF CONTENTS

GENERAL NOTES & ELEVATIONS.....1
GLAZING DETAILS.....2
DP CHARTS.....3-5
SECTION VIEWS & ALT FRAME.....6
EXTRUSIONS & B.O.M.....7
ANCHOR SCHEDULE & NOTES.....8-9
INSTALLATION DETAIL.....10-11

Custom C WINDOW SYSTEMS
1900 SW 44TH AVE.
OCALA, FLORIDA 34474
WWW.CWS.CC

3500 ALUM. SINGLE HUNG NON-IMPACT

REVISIONS

NO.:	DESCRIPTION:	DATE:	BY:
D	UPDATED TO 2015 FBC	02/16/15	EMK
C	UPDATED ANCHOR SCH. & DP CHARTS	08/13/13	
B	CORRECTED DP CHARTS	02/15/12	
A	UPDATED TO 2010 FBC	10/12/11	

LUCAS ANDREW TURNER
LICENSE
No 58201
STATE OF FLORIDA
PROFESSIONAL ENGINEER

2/23/2015

LUCAS A. TURNER, P.E.
FL PE # 58201
1239 JABARA AVE.
NORTH PORT, FL 34288
PH. 941-380-1574

SHEET DESCRIPTION:
GENERAL NOTES AND ELEVATIONS

DRAWN BY:	DATE:
ADE	03/16/09
DWG #: CWS-466	REV.: D
SCALE: 1:25	SHEET 1 OF 11

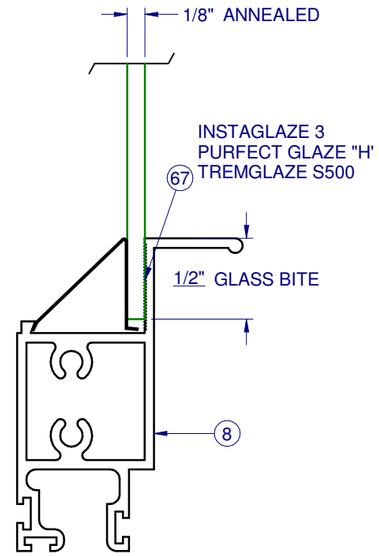

GLASS TYPE A

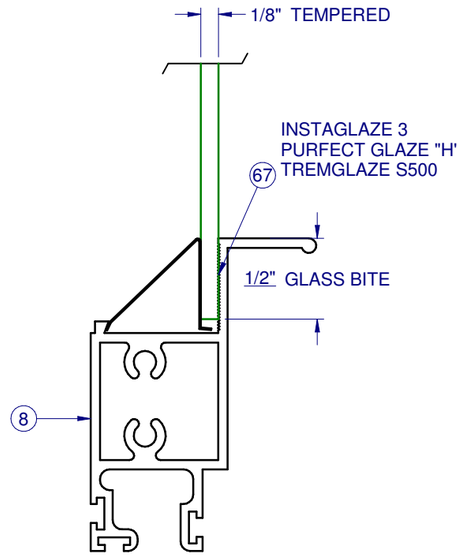

GLASS TYPE B

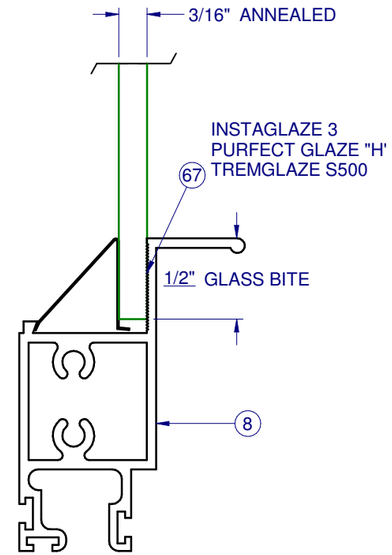

GLASS TYPE C

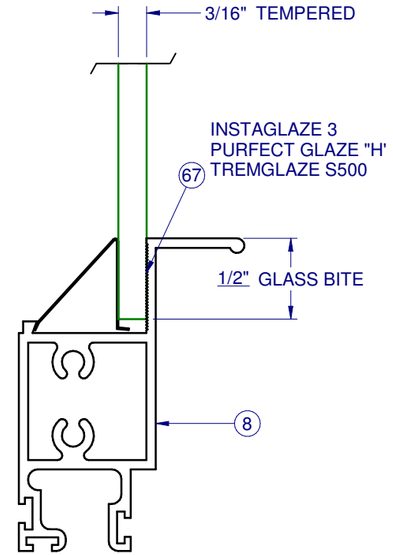

GLASS TYPE D

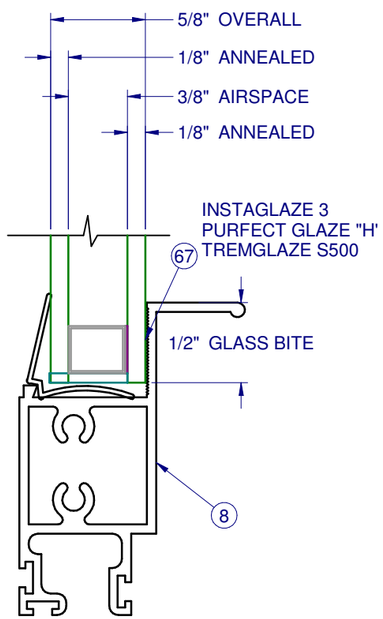

GLASS TYPE E

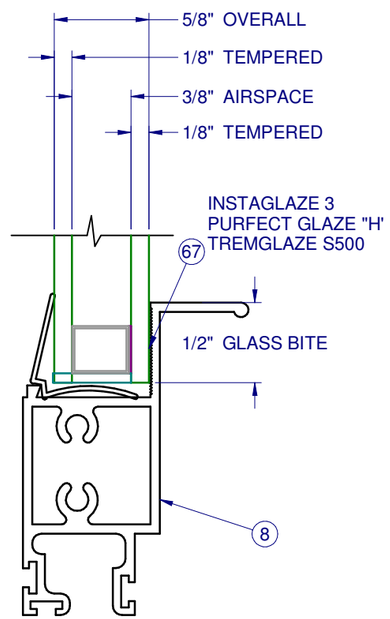

GLASS TYPE F

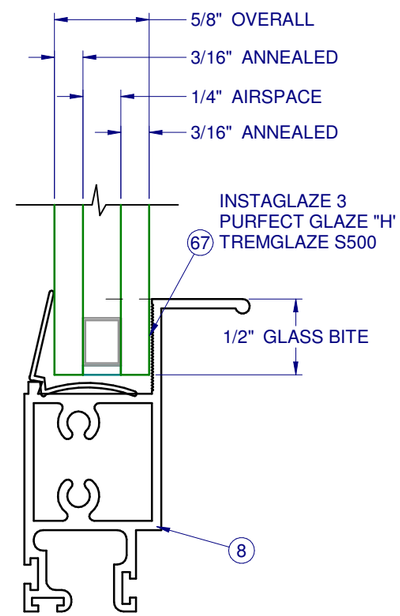

GLASS TYPE G

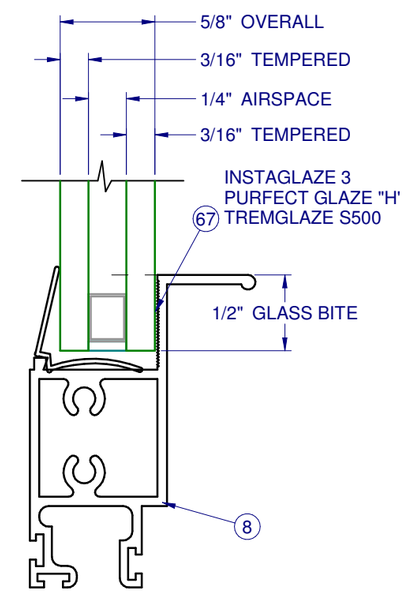

GLASS TYPE H

Custom C WINDOW SYSTEMS
1900 SW 44TH AVE.
OCALA, FLORIDA 34474
WWW.CWS.CC

3500 ALUM. SINGLE HUNG NON-IMPACT

REVISIONS

NO.:	DESCRIPTION:	BY:	DATE:
D	UPDATED TO 2015 FBC	EMK	02/16/15
C	UPDATED ANCHOR SCH. & DP CHARTS		08/13/13
B	CORRECTED DP CHARTS		02/15/12
A	UPDATED TO 2010 FBC		10/12/11

LUCAS ANDREW TURNER
LICENSE
No 58201
STATE OF FLORIDA
PROFESSIONAL ENGINEER

2/23/2015

LUCAS A. TURNER, P.E.
FL PE # 58201
1239 JABARA AVE.
NORTH PORT, FL 34288
PH. 941-380-1574

SHEET DESCRIPTION:
GLAZING DETAIL

DRAWN BY:	DATE:
ADE	03/16/09
DWG #: CWS-466	REV.: D
SCALE: 1:1	SHEET 2 OF 11

DP CHART: EQUAL SPLIT W/CLIPS

DESIGN PRESSURES FOR EQUAL SPLIT CONFIGURATION WITH ANCHOR CLIPS (SEE NOTE 2)

Overall Flange Height	Unit Height	Overall Flange Width / Unit Width	24.750 / 23.500	26.750 / 25.500	28.750 / 27.500	32.750 / 31.500	37.000 / 35.750	40.750 / 39.500	44.750 / 43.500	48.750 / 47.500	53.125 / 51.875	57.250 / 56.000
28.750	27.500	Glass Type A	+50.0 / -70.0	+50.0 / -70.0	+50.0 / -70.0	+50.0 / -70.0	+50.0 / -70.0	+50.0 / -70.0	+50.0 / -70.0	+50.0 / -70.0	+50.0 / -69.1	+50.0 / -64.6
		Glass Type B, C, D, E, F, G, H	+50.0 / -70.0	+50.0 / -70.0	+50.0 / -70.0	+50.0 / -70.0	+50.0 / -70.0	+50.0 / -70.0	+50.0 / -70.0	+50.0 / -70.0	+50.0 / -69.1	+50.0 / -64.6
32.750	31.500	Glass Type A	+50.0 / -70.0	+50.0 / -70.0	+50.0 / -70.0	+50.0 / -70.0	+50.0 / -70.0	+50.0 / -70.0	+50.0 / -69.0	+50.0 / -64.0	+50.0 / -59.3	+50.0 / -55.5
		Glass Type B, C, D, E, F, G, H	+50.0 / -70.0	+50.0 / -70.0	+50.0 / -70.0	+50.0 / -70.0	+50.0 / -70.0	+50.0 / -70.0	+50.0 / -69.0	+50.0 / -64.0	+50.0 / -59.3	+50.0 / -55.5
36.750	35.500	Glass Type A	+50.0 / -70.0	+50.0 / -70.0	+50.0 / -70.0	+50.0 / -70.0	+50.0 / -69.9	+50.0 / -61.9	+50.0 / -57.0	+50.0 / -53.5	+50.0 / -50.1	+48.4 / -48.4
		Glass Type B, C, D, E, F, G, H	+50.0 / -70.0	+50.0 / -70.0	+50.0 / -70.0	+50.0 / -70.0	+50.0 / -69.9	+50.0 / -61.9	+50.0 / -57.0	+50.0 / -53.5	+50.0 / -50.1	+48.4 / -48.4
38.375	37.125	Glass Type A	+50.0 / -70.0	+50.0 / -70.0	+50.0 / -70.0	+50.0 / -70.0	+50.0 / -66.8	+50.0 / -59.8	+50.0 / -54.1	+50.0 / -50.2	+46.8 / -46.8	+44.8 / -44.8
		Glass Type B, C, D, E, F, G, H	+50.0 / -70.0	+50.0 / -70.0	+50.0 / -70.0	+50.0 / -70.0	+50.0 / -66.8	+50.0 / -59.8	+50.0 / -54.1	+50.0 / -50.2	+46.8 / -46.8	+44.8 / -44.8
40.750	39.500	Glass Type A	+50.0 / -70.0	+50.0 / -70.0	+50.0 / -70.0	+50.0 / -68.3	+50.0 / -62.0	+50.0 / -57.2	+50.0 / -51.5	+47.3 / -47.3	+42.9 / -42.9	+40.7 / -40.7
		Glass Type B, C, D, E, F, G, H	+50.0 / -70.0	+50.0 / -70.0	+50.0 / -70.0	+50.0 / -68.3	+50.0 / -62.0	+50.0 / -57.2	+50.0 / -51.5	+47.3 / -47.3	+42.9 / -42.9	+40.7 / -40.7
44.750	43.500	Glass Type A	+50.0 / -70.0	+50.0 / -70.0	+50.0 / -66.9	+50.0 / -60.6	+50.0 / -55.0	+50.0 / -50.9	+47.2 / -47.2	+44.0 / -44.0	+39.8 / -39.8	+36.9 / -36.9
		Glass Type B, C, D, E, F, G, H	+50.0 / -70.0	+50.0 / -70.0	+50.0 / -66.9	+50.0 / -60.6	+50.0 / -55.0	+50.0 / -50.9	+47.2 / -47.2	+44.0 / -44.0	+39.8 / -39.8	+36.9 / -36.9
48.750	47.500	Glass Type A	+50.0 / -70.0	+50.0 / -70.0	+50.0 / -66.9	+50.0 / -60.6	+50.0 / -55.0	+50.0 / -50.9	+49.4 / -49.4	+44.0 / -44.0	+38.9 / -38.9	+35.2 / -35.2
		Glass Type B, C, D, E, F, G, H	+50.0 / -70.0	+50.0 / -70.0	+50.0 / -66.9	+50.0 / -60.6	+50.0 / -55.0	+50.0 / -50.9	+49.4 / -49.4	+44.0 / -44.0	+38.9 / -38.9	+35.2 / -35.2
50.625	49.375	Glass Type A	+50.0 / -70.0	+50.0 / -70.0	+50.0 / -66.9	+50.0 / -60.6	+50.0 / -55.0	+50.0 / -50.9	+49.3 / -49.3	+43.9 / -43.9	+38.8 / -38.8	+35.1 / -35.1
		Glass Type B, C, D, E, F, G, H	+50.0 / -70.0	+50.0 / -70.0	+50.0 / -66.9	+50.0 / -60.6	+50.0 / -55.0	+50.0 / -50.9	+49.3 / -49.3	+43.9 / -43.9	+38.8 / -38.8	+35.1 / -35.1
52.750	51.500	Glass Type A	+50.0 / -70.0	+50.0 / -70.0	+50.0 / -66.9	+50.0 / -60.6	+50.0 / -55.0	+50.0 / -50.9	+49.1 / -49.1	+43.9 / -43.9	+39.0 / -39.0	+35.1 / -35.1
		Glass Type B, C, D, E, F, G, H	+50.0 / -70.0	+50.0 / -70.0	+50.0 / -66.9	+50.0 / -60.6	+50.0 / -55.0	+50.0 / -50.9	+49.1 / -49.1	+43.9 / -43.9	+39.0 / -39.0	+35.1 / -35.1
56.750	55.500	Glass Type A	+50.0 / -70.0	+50.0 / -70.0	+50.0 / -66.9	+50.0 / -60.6	+50.0 / -55.0	+50.0 / -50.9	+48.4 / -48.4	+43.7 / -43.7	+38.9 / -38.9	+35.4 / -35.4
		Glass Type B, C, D, E, F, G, H	+50.0 / -70.0	+50.0 / -70.0	+50.0 / -66.9	+50.0 / -60.6	+50.0 / -55.0	+50.0 / -50.9	+48.4 / -48.4	+43.7 / -43.7	+38.9 / -38.9	+35.4 / -35.4
60.750	59.500	Glass Type A	+50.0 / -70.0	+50.0 / -70.0	+50.0 / -66.5	+50.0 / -60.6	+50.0 / -55.0	+50.0 / -50.9	+47.5 / -47.5	+42.8 / -42.8	+38.7 / -38.7	+35.3 / -35.3
		Glass Type B, C, D, E, F, G, H	+50.0 / -70.0	+50.0 / -70.0	+50.0 / -66.5	+50.0 / -60.6	+50.0 / -55.0	+50.0 / -50.9	+47.5 / -47.5	+42.8 / -42.8	+38.7 / -38.7	+35.3 / -35.3
63.000	61.750	Glass Type A	+50.0 / -70.0	+50.0 / -67.0	+50.0 / -63.4	+50.0 / -57.8	+50.0 / -53.0	+49.4 / -49.4	+46.0 / -46.0	+42.1 / -42.1	+38.4 / -38.4	+35.2 / -35.2
		Glass Type B, C, D, E, F, G, H	+50.0 / -70.0	+50.0 / -67.0	+50.0 / -63.4	+50.0 / -57.8	+50.0 / -53.0	+49.4 / -49.4	+46.0 / -46.0	+42.1 / -42.1	+38.4 / -38.4	+35.2 / -35.2
66.750	65.500	Glass Type A	+50.0 / -66.3	+50.0 / -62.3	+50.0 / -58.8	+50.0 / -53.4	+49.0 / -49.0	+45.7 / -45.7	+42.7 / -42.7	+40.0 / -40.0	+37.4 / -37.4	+34.7 / -34.7
		Glass Type B, C, D, E, F, G, H	+50.0 / -66.3	+50.0 / -62.3	+50.0 / -58.8	+50.0 / -53.4	+49.0 / -49.0	+45.7 / -45.7	+42.7 / -42.7	+40.0 / -40.0	+37.4 / -37.4	+34.7 / -34.7
68.750	67.500	Glass Type A	+50.0 / -63.9	+50.0 / -60.0	+50.0 / -56.6	+50.0 / -51.4	+47.1 / -47.1	+44.0 / -44.0	+41.1 / -41.1	+38.5 / -38.5	+36.1 / -36.1	+34.0 / -34.0
		Glass Type B, C, D, E, F, G, H	+50.0 / -63.9	+50.0 / -60.0	+50.0 / -56.6	+50.0 / -51.4	+47.1 / -47.1	+44.0 / -44.0	+41.1 / -41.1	+38.5 / -38.5	+36.1 / -36.1	+34.0 / -34.0
72.750	71.500	Glass Type A	+50.0 / -63.9	+50.0 / -60.0	+50.0 / -56.6	+50.0 / -51.4	+47.1 / -47.1	+44.0 / -44.0	+41.1 / -41.1	+38.5 / -38.5	+35.5 / -35.5	+32.8 / -32.8
		Glass Type B, C, D, E, F, G, H	+50.0 / -63.9	+50.0 / -60.0	+50.0 / -56.6	+50.0 / -51.4	+47.1 / -47.1	+44.0 / -44.0	+41.1 / -41.1	+38.5 / -38.5	+35.5 / -35.5	+32.8 / -32.8
76.000	74.750	Glass Type A	+50.0 / -60.2	+50.0 / -57.7	+50.0 / -55.8	+50.0 / -51.4	+47.1 / -47.1	+43.5 / -43.5	+40.1 / -40.1	+37.4 / -37.4	+34.2 / -34.2	+31.6 / -31.6
		Glass Type B, C, D, E, F, G, H	+50.0 / -60.2	+50.0 / -57.7	+50.0 / -55.8	+50.0 / -51.4	+47.1 / -47.1	+43.5 / -43.5	+40.1 / -40.1	+37.4 / -37.4	+34.2 / -34.2	+31.6 / -31.6
80.750	79.500	Glass Type A	+50.0 / -55.1	+50.0 / -52.6	+50.0 / -50.7	+47.9 / -47.9	+45.0 / -45.0	+41.2 / -41.2	+38.1 / -38.1	+35.5 / -35.5	+32.1 / -32.1	+30.1 / -30.1
		Glass Type B, C, D, E, F, G, H	+50.0 / -55.1	+50.0 / -52.6	+50.0 / -50.7	+47.9 / -47.9	+45.0 / -45.0	+41.2 / -41.2	+38.1 / -38.1	+35.5 / -35.5	+32.1 / -32.1	+30.1 / -30.1
84.750	83.500	Glass Type A	+50.0 / -51.4	+49.0 / -49.0	+47.1 / -47.1	+44.2 / -44.2	+42.4 / -42.4	+39.6 / -39.6	+36.6 / -36.6	+33.7 / -33.7	+30.7 / -30.7	+28.8 / -28.8
		Glass Type B, C, D, E, F, G, H	+50.0 / -51.4	+49.0 / -49.0	+47.1 / -47.1	+44.2 / -44.2	+42.4 / -42.4	+39.6 / -39.6	+36.6 / -36.6	+33.7 / -33.7	+30.7 / -30.7	+30.0 / -30.0
88.750	87.500	Glass Type A	+48.2 / -48.2	+45.8 / -45.8	+43.9 / -43.9	+41.1 / -41.1	+39.2 / -39.2	+38.1 / -38.1	+35.2 / -35.2	+32.1 / -32.1	+29.5 / -29.5	+27.6 / -27.6
		Glass Type B, C, D, E, F, G, H	+48.2 / -48.2	+45.8 / -45.8	+43.9 / -43.9	+41.1 / -41.1	+39.2 / -39.2	+38.1 / -38.1	+35.2 / -35.2	+32.1 / -32.1	+30.0 / -30.0	+30.0 / -30.0
92.250	91.000	Glass Type A	+45.7 / -45.7	+43.4 / -43.4	+41.5 / -41.5	+38.7 / -38.7	+36.7 / -36.7	+35.6 / -35.6	+33.7 / -33.7	+30.9 / -30.9	+28.4 / -28.4	+26.6 / -26.6
		Glass Type B, C, D, E, F, G, H	+45.7 / -45.7	+43.4 / -43.4	+41.5 / -41.5	+38.7 / -38.7	+36.7 / -36.7	+35.6 / -35.6	+33.7 / -33.7	+30.9 / -30.9	+30.0 / -30.0	+30.0 / -30.0

FIGURE 3.1 (SEE NOTE 2)

EXAMPLE 36" x 62" THRU FRAME/THRU CLIP COMBINATION

LEFT JAMB: USING INSTALLATION CLIP ANCHORS
RIGHT JAMB: ANCHORS THRU FRAME

HEAD: ANCHORS THRU FRAME
SILL: USING INSTALLATION CLIP ANCHORS

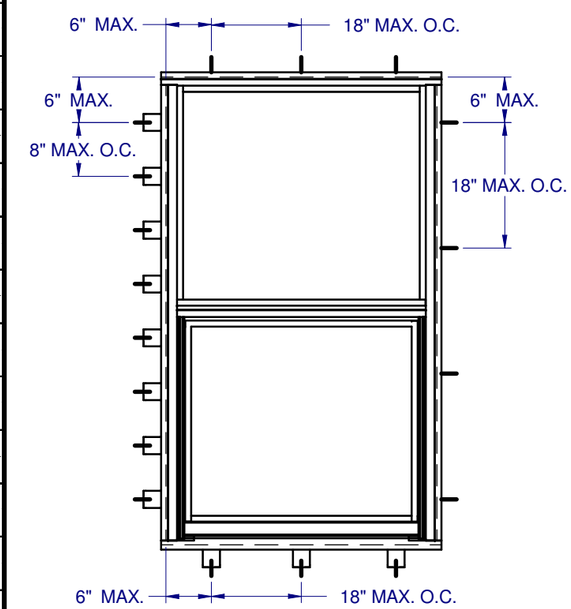

NOTES:

1. IF SIZE INTENDED IS NOT SHOWN, USE NEXT LARGER SIZE.

2. THRU FRAME OR THRU CLIP ANCHORS MAY BE USED AT ANY SIDE OF WINDOW WHILE MAINTAINING THE RESPECTIVE SPECIFIED SPACING (I.E., THRU FRAME ANCHOR SPACING OR THRU CLIP ANCHOR SPACING). REFER TO FIGURE 3.1 FOR EXAMPLE THRU FRAME/THRU CLIP ANCHOR COMBINATION.

Custom CWS WINDOW SYSTEMS
1900 SW 44TH AVE.
OCALA, FLORIDA 34474
WWW.CWS.CC

3500 ALUM. SINGLE HUNG NON-IMPACT

REVISIONS

NO.:	DESCRIPTION:	BY:	DATE:
D	UPDATED TO 2015 FBC	EMK	02/16/15
C	UPDATED ANCHOR SCH. & DP CHARTS		08/13/13
B	CORRECTED DP CHARTS		02/15/12
A	UPDATED TO 2010 FBC		10/12/11

LUCAS ANDREW TURNER
LICENSE
No 58201
STATE OF FLORIDA
PROFESSIONAL ENGINEER

2/23/2015

LUCAS A. TURNER, P.E.
FL PE # 58201
1239 JABARA AVE.
NORTH PORT, FL 34288
PH. 941-380-1574

SHEET DESCRIPTION:
COMPARATIVE ANALYSIS - EQUAL SPLIT W/CLIPS

DRAWN BY:	DATE:
ADE	03/16/09
DWG #: CWS-466	REV.: D
SCALE: 1:1	SHEET 3 OF 11

DP CHART: EQUAL SPLIT

DESIGN PRESSURES FOR EQUAL SPLIT CONFIGURATION. LIMITED BY GLASS AND TESTED PRESSURE LIMITATIONS

Overall Flange Height	Unit Height	Overall Flange Width / Unit Width	24.750 / 23.500	26.750 / 25.500	28.750 / 27.500	32.750 / 31.500	37.000 / 35.750	40.750 / 39.500	44.750 / 43.500	48.750 / 47.500	53.125 / 51.875	57.250 / 56.000
28.750	27.500	Glass Type A	+50.0 / -70.0	+50.0 / -70.0	+50.0 / -70.0	+50.0 / -70.0	+50.0 / -70.0	+50.0 / -70.0	+50.0 / -70.0	+50.0 / -70.0	+50.0 / -70.0	+50.0 / -70.0
		Glass Type B, C, D, E, F, G, H	+50.0 / -70.0	+50.0 / -70.0	+50.0 / -70.0	+50.0 / -70.0	+50.0 / -70.0	+50.0 / -70.0	+50.0 / -70.0	+50.0 / -70.0	+50.0 / -70.0	+50.0 / -70.0
32.750	31.500	Glass Type A	+50.0 / -70.0	+50.0 / -70.0	+50.0 / -70.0	+50.0 / -70.0	+50.0 / -70.0	+50.0 / -70.0	+50.0 / -69.2	+50.0 / -66.1	+50.0 / -62.9	+50.0 / -61.3
		Glass Type B, C, D, E, F, G, H	+50.0 / -70.0	+50.0 / -70.0	+50.0 / -70.0	+50.0 / -70.0	+50.0 / -70.0	+50.0 / -70.0	+50.0 / -70.0	+50.0 / -70.0	+50.0 / -70.0	+50.0 / -69.9
36.750	35.500	Glass Type A	+50.0 / -70.0	+50.0 / -70.0	+50.0 / -70.0	+50.0 / -70.0	+50.0 / -69.9	+50.0 / -61.9	+50.0 / -57.0	+50.0 / -53.5	+50.0 / -50.1	+48.4 / -48.4
		Glass Type B, C, D, E, F, G, H	+50.0 / -70.0	+50.0 / -70.0	+50.0 / -70.0	+50.0 / -70.0	+50.0 / -70.0	+50.0 / -70.0	+50.0 / -70.0	+50.0 / -70.0	+50.0 / -69.4	+50.0 / -63.3
38.375	37.125	Glass Type A	+50.0 / -70.0	+50.0 / -70.0	+50.0 / -70.0	+50.0 / -70.0	+50.0 / -68.1	+50.0 / -59.8	+50.0 / -54.1	+50.0 / -50.2	+46.8 / -46.8	+44.8 / -44.8
		Glass Type B, C, D, E, F, G, H	+50.0 / -70.0	+50.0 / -70.0	+50.0 / -70.0	+50.0 / -70.0	+50.0 / -70.0	+50.0 / -70.0	+50.0 / -70.0	+50.0 / -70.0	+50.0 / -67.0	+50.0 / -61.1
40.750	39.500	Glass Type A	+50.0 / -70.0	+50.0 / -70.0	+50.0 / -70.0	+50.0 / -70.0	+50.0 / -66.4	+50.0 / -58.0	+50.0 / -51.5	+47.3 / -47.3	+42.9 / -42.9	+40.7 / -40.7
		Glass Type B, C, D, E, F, G, H	+50.0 / -70.0	+50.0 / -70.0	+50.0 / -70.0	+50.0 / -70.0	+50.0 / -70.0	+50.0 / -70.0	+50.0 / -70.0	+50.0 / -70.0	+50.0 / -63.8	+50.0 / -58.1
44.750	43.500	Glass Type A	+50.0 / -70.0	+50.0 / -70.0	+50.0 / -70.0	+50.0 / -70.0	+50.0 / -64.7	+50.0 / -56.7	+49.9 / -49.9	+44.5 / -44.5	+39.8 / -39.8	+36.9 / -36.9
		Glass Type B, C, D, E, F, G, H	+50.0 / -70.0	+50.0 / -70.0	+50.0 / -70.0	+50.0 / -70.0	+50.0 / -70.0	+50.0 / -70.0	+50.0 / -70.0	+50.0 / -66.5	+50.0 / -59.4	+50.0 / -54.0
48.750	47.500	Glass Type A	+50.0 / -70.0	+50.0 / -70.0	+50.0 / -70.0	+50.0 / -70.0	+50.0 / -63.2	+50.0 / -56.0	+49.4 / -49.4	+44.0 / -44.0	+38.9 / -38.9	+35.2 / -35.2
		Glass Type B, C, D, E, F, G, H	+50.0 / -70.0	+50.0 / -70.0	+50.0 / -70.0	+50.0 / -70.0	+50.0 / -70.0	+50.0 / -70.0	+50.0 / -70.0	+50.0 / -62.6	+50.0 / -55.7	+50.0 / -50.5
50.625	49.375	Glass Type A	+50.0 / -70.0	+50.0 / -70.0	+50.0 / -70.0	+50.0 / -70.0	+50.0 / -62.5	+50.0 / -55.6	+49.3 / -49.3	+43.9 / -43.9	+38.8 / -38.8	+35.1 / -35.1
		Glass Type B, C, D, E, F, G, H	+50.0 / -70.0	+50.0 / -70.0	+50.0 / -70.0	+50.0 / -70.0	+50.0 / -70.0	+50.0 / -70.0	+50.0 / -68.8	+50.0 / -61.0	+50.0 / -54.3	+49.1 / -49.1
52.750	51.500	Glass Type A	+50.0 / -70.0	+50.0 / -70.0	+50.0 / -70.0	+50.0 / -70.0	+50.0 / -61.5	+50.0 / -55.2	+49.1 / -49.1	+43.9 / -43.9	+39.0 / -39.0	+35.1 / -35.1
		Glass Type B, C, D, E, F, G, H	+50.0 / -70.0	+50.0 / -70.0	+50.0 / -70.0	+50.0 / -70.0	+50.0 / -70.0	+50.0 / -70.0	+50.0 / -67.1	+50.0 / -59.4	+50.0 / -52.7	+47.7 / -47.7
56.750	55.500	Glass Type A	+50.0 / -70.0	+50.0 / -70.0	+50.0 / -70.0	+50.0 / -67.4	+50.0 / -59.6	+50.0 / -53.9	+48.4 / -48.4	+43.7 / -43.7	+38.9 / -38.9	+35.4 / -35.4
		Glass Type B, C, D, E, F, G, H	+50.0 / -70.0	+50.0 / -70.0	+50.0 / -70.0	+50.0 / -70.0	+50.0 / -70.0	+50.0 / -70.0	+50.0 / -64.4	+50.0 / -56.7	+50.0 / -50.2	+45.3 / -45.3
60.750	59.500	Glass Type A	+50.0 / -70.0	+50.0 / -70.0	+50.0 / -70.0	+50.0 / -63.7	+50.0 / -57.3	+50.0 / -51.7	+47.5 / -47.5	+42.8 / -42.8	+38.7 / -38.7	+35.3 / -35.3
		Glass Type B, C, D, E, F, G, H	+50.0 / -70.0	+50.0 / -70.0	+50.0 / -70.0	+50.0 / -70.0	+50.0 / -70.0	+50.0 / -70.0	+50.0 / -62.2	+50.0 / -54.6	+48.1 / -48.1	+43.3 / -43.3
63.000	61.750	Glass Type A	+50.0 / -70.0	+50.0 / -70.0	+50.0 / -69.1	+50.0 / -61.9	+50.0 / -55.6	+50.0 / -50.7	+46.4 / -46.4	+42.1 / -42.1	+38.4 / -38.4	+35.2 / -35.2
		Glass Type B, C, D, E, F, G, H	+50.0 / -70.0	+50.0 / -70.0	+50.0 / -70.0	+50.0 / -70.0	+50.0 / -70.0	+50.0 / -70.0	+50.0 / -61.1	+50.0 / -53.5	+47.1 / -47.1	+42.3 / -42.3
66.750	65.500	Glass Type A	+50.0 / -70.0	+50.0 / -68.9	+50.0 / -65.4	+50.0 / -59.1	+50.0 / -52.8	+48.8 / -48.8	+44.5 / -44.5	+41.0 / -41.0	+37.4 / -37.4	+34.7 / -34.7
		Glass Type B, C, D, E, F, G, H	+50.0 / -70.0	+50.0 / -70.0	+50.0 / -69.3	+50.0 / -67.7	+50.0 / -67.6	+50.0 / -67.6	+50.0 / -59.6	+50.0 / -51.9	+45.5 / -45.5	+40.8 / -40.8
68.750	67.500	Glass Type A	+50.0 / -69.0	+50.0 / -66.4	+50.0 / -63.5	+50.0 / -57.6	+50.0 / -51.6	+47.6 / -47.6	+43.5 / -43.5	+40.2 / -40.2	+36.8 / -36.8	+34.1 / -34.1
		Glass Type B, C, D, E, F, G, H	+50.0 / -70.0	+50.0 / -67.7	+50.0 / -65.9	+50.0 / -63.9	+50.0 / -63.6	+50.0 / -63.6	+50.0 / -58.9	+50.0 / -51.2	+44.8 / -44.8	+40.1 / -40.1
72.750	71.500	Glass Type A	+50.0 / -64.0	+50.0 / -61.8	+50.0 / -59.9	+50.0 / -54.6	+49.5 / -49.5	+45.3 / -45.3	+41.5 / -41.5	+38.6 / -38.6	+35.5 / -35.5	+32.8 / -32.8
		Glass Type B, C, D, E, F, G, H	+50.0 / -64.2	+50.0 / -61.8	+50.0 / -59.9	+50.0 / -57.5	+50.0 / -56.7	+50.0 / -56.7	+50.0 / -56.7	+50.0 / -50.0	+43.6 / -43.6	+38.8 / -38.8
76.000	74.750	Glass Type A	+50.0 / -60.2	+50.0 / -57.7	+50.0 / -55.8	+50.0 / -52.5	+47.6 / -47.6	+43.5 / -43.5	+40.1 / -40.1	+37.4 / -37.4	+34.2 / -34.2	+31.6 / -31.6
		Glass Type B, C, D, E, F, G, H	+50.0 / -60.2	+50.0 / -57.7	+50.0 / -55.8	+50.0 / -53.2	+50.0 / -52.0	+50.0 / -51.9	+50.0 / -51.9	+49.2 / -49.2	+42.7 / -42.7	+38.0 / -38.0
80.750	79.500	Glass Type A	+50.0 / -55.1	+50.0 / -52.6	+50.0 / -50.7	+47.9 / -47.9	+45.0 / -45.0	+41.2 / -41.2	+38.1 / -38.1	+35.5 / -35.5	+32.1 / -32.1	+30.1 / -30.1
		Glass Type B, C, D, E, F, G, H	+50.0 / -55.1	+50.0 / -52.6	+50.0 / -50.7	+47.9 / -47.9	+46.3 / -46.3	+45.9 / -45.9	+45.9 / -45.9	+45.9 / -45.9	+41.6 / -41.6	+36.9 / -36.9
84.750	83.500	Glass Type A	+50.0 / -51.4	+49.0 / -49.0	+47.1 / -47.1	+44.2 / -44.2	+42.4 / -42.4	+39.6 / -39.6	+36.6 / -36.6	+33.7 / -33.7	+30.7 / -30.7	+28.8 / -28.8
		Glass Type B, C, D, E, F, G, H	+50.0 / -51.4	+49.0 / -49.0	+47.1 / -47.1	+44.2 / -44.2	+42.4 / -42.4	+41.7 / -41.7	+41.6 / -41.6	+41.6 / -41.6	+40.9 / -40.9	+36.1 / -36.1
88.750	87.500	Glass Type A	+48.2 / -48.2	+45.8 / -45.8	+43.9 / -43.9	+41.1 / -41.1	+39.2 / -39.2	+38.1 / -38.1	+35.2 / -35.2	+32.1 / -32.1	+29.5 / -29.5	+27.6 / -27.6
		Glass Type B, C, D, E, F, G, H	+48.2 / -48.2	+45.8 / -45.8	+43.9 / -43.9	+41.1 / -41.1	+39.2 / -39.2	+38.2 / -38.2	+37.9 / -37.9	+37.9 / -37.9	+37.9 / -37.9	+35.5 / -35.5
92.250	91.000	Glass Type A	+45.7 / -45.7	+43.4 / -43.4	+41.5 / -41.5	+38.7 / -38.7	+36.7 / -36.7	+35.6 / -35.6	+33.7 / -33.7	+30.9 / -30.9	+28.4 / -28.4	+26.6 / -26.6
		Glass Type B, C, D, E, F, G, H	+45.7 / -45.7	+43.4 / -43.4	+41.5 / -41.5	+38.7 / -38.7	+36.7 / -36.7	+35.6 / -35.6	+35.1 / -35.1	+35.0 / -35.0	+35.0 / -35.0	+35.0 / -35.0

NOTES:

1. IF SIZE INTENDED IS NOT SHOWN, USE NEXT LARGER SIZE.

2. IF THRU FRAME ANCHORS ARE SUBSTITUTED WITH INSTALLATION CLIPS, DP IS LIMITED TO +30/-30 PSF AND UNIT WIDTH IS LIMITED TO 51.875".

Custom CWS WINDOW SYSTEMS
1900 SW 44TH AVE.
OCALA, FLORIDA 34474
WWW.CWS.CC

3500 ALUM. SINGLE HUNG NON-IMPACT

REVISIONS

NO.:	DESCRIPTION:	BY:	DATE:
D	UPDATED TO 2015 FBC	EMK	02/16/15
C	UPDATED ANCHOR SCH. & DP CHARTS		08/13/13
B	CORRECTED DP CHARTS		02/15/12
A	UPDATED TO 2010 FBC		10/12/11

LUCAS ANDREW TURNER
LICENSE
No 58201
STATE OF FLORIDA
PROFESSIONAL ENGINEER

2/23/2015

LUCAS A. TURNER, P.E.
FL PE # 58201
1239 JABARA AVE.
NORTH PORT, FL 34288
PH. 941-380-1574

SHEET DESCRIPTION:
COMPARATIVE ANALYSIS - EQUAL SPLIT

DRAWN BY:	DATE:
ADE	03/16/09
DWG #: CWS-466	REV.: D
SCALE: 1:1	SHEET 4 OF 11

DP CHART C: ORIEL

DESIGN PRESSURES FOR ORIEL CONFIGURATION. LIMITED BY GLASS AND TESTING DESIGN LIMITATIONS

Overall Flg Height	Unit Height	Sash Height	Overall Flange Width / Unit Width	24.750 / 23.500	26.750 / 25.500	28.750 / 27.500	32.750 / 31.500	37.000 / 35.750	40.750 / 39.500	44.750 / 43.500	48.750 / 47.500	53.125 / 51.875	57.250 / 56.000
28.750	27.500	12.000	Glass A Sash, Glass E Fixed	+50.0 / -70.0	+50.0 / -70.0	+50.0 / -70.0	+50.0 / -70.0	+50.0 / -70.0	+50.0 / -70.0	+50.0 / -70.0	+50.0 / -70.0	+50.0 / -70.0	+50.0 / -70.0
			Glass Type B, C, D, E, F, G, H	+50.0 / -70.0	+50.0 / -70.0	+50.0 / -70.0	+50.0 / -70.0	+50.0 / -70.0	+50.0 / -70.0	+50.0 / -70.0	+50.0 / -70.0	+50.0 / -70.0	+50.0 / -70.0
32.750	31.500	12.000	Glass A Sash, Glass E Fixed	+50.0 / -70.0	+50.0 / -70.0	+50.0 / -70.0	+50.0 / -70.0	+50.0 / -70.0	+50.0 / -70.0	+50.0 / -70.0	+50.0 / -70.0	+50.0 / -69.3	+50.0 / -67.6
			Glass Type B, C, D, E, F, G, H	+50.0 / -70.0	+50.0 / -70.0	+50.0 / -70.0	+50.0 / -70.0	+50.0 / -70.0	+50.0 / -70.0	+50.0 / -70.0	+50.0 / -70.0	+50.0 / -70.0	+50.0 / -69.9
36.750	35.500	12.062	Glass A Sash, Glass E Fixed	+50.0 / -70.0	+50.0 / -70.0	+50.0 / -70.0	+50.0 / -70.0	+50.0 / -70.0	+50.0 / -64.8	+50.0 / -60.4	+50.0 / -57.2	+50.0 / -53.6	+50.0 / -52.1
			Glass Type B, C, D, E, F, G, H	+50.0 / -70.0	+50.0 / -70.0	+50.0 / -70.0	+50.0 / -70.0	+50.0 / -70.0	+50.0 / -70.0	+50.0 / -70.0	+50.0 / -70.0	+50.0 / -69.4	+50.0 / -63.2
38.375	37.125	12.625	Glass A Sash, Glass E Fixed	+50.0 / -70.0	+50.0 / -70.0	+50.0 / -70.0	+50.0 / -70.0	+50.0 / -69.7	+50.0 / -61.6	+50.0 / -56.6	+50.0 / -53.0	+49.7 / -49.7	+48.0 / -48.0
			Glass Type B, C, D, E, F, G, H	+50.0 / -70.0	+50.0 / -70.0	+50.0 / -70.0	+50.0 / -70.0	+50.0 / -70.0	+50.0 / -70.0	+50.0 / -70.0	+50.0 / -70.0	+50.0 / -65.8	+50.0 / -60.8
40.750	39.500	13.438	Glass A Sash, Glass E Fixed	+50.0 / -70.0	+50.0 / -70.0	+50.0 / -70.0	+50.0 / -70.0	+50.0 / -67.3	+50.0 / -59.0	+50.0 / -52.8	+48.9 / -48.9	+45.1 / -45.1	+42.8 / -42.8
			Glass Type B, C, D, E, F, G, H	+50.0 / -70.0	+50.0 / -70.0	+50.0 / -70.0	+50.0 / -70.0	+50.0 / -70.0	+50.0 / -70.0	+50.0 / -70.0	+50.0 / -69.3	+50.0 / -61.3	+50.0 / -56.6
44.750	43.500	14.812	Glass A Sash, Glass E Fixed	+50.0 / -70.0	+50.0 / -70.0	+50.0 / -70.0	+50.0 / -70.0	+50.0 / -65.3	+50.0 / -57.0	+50.0 / -50.3	+45.2 / -45.2	+40.5 / -40.5	+37.9 / -37.9
			Glass Type B, C, D, E, F, G, H	+50.0 / -70.0	+50.0 / -70.0	+50.0 / -70.0	+50.0 / -70.0	+50.0 / -70.0	+50.0 / -70.0	+50.0 / -70.0	+50.0 / -65.1	+50.0 / -58.0	+50.0 / -52.6
48.750	47.500	16.125	Glass A Sash, Glass E Fixed	+50.0 / -70.0	+50.0 / -70.0	+50.0 / -70.0	+50.0 / -70.0	+50.0 / -63.8	+50.0 / -56.3	+49.6 / -49.6	+44.0 / -44.0	+39.1 / -39.1	+35.4 / -35.4
			Glass Type B, C, D, E, F, G, H	+50.0 / -70.0	+50.0 / -70.0	+50.0 / -70.0	+50.0 / -70.0	+50.0 / -70.0	+50.0 / -70.0	+50.0 / -68.4	+50.0 / -62.0	+50.0 / -55.7	+50.0 / -50.5
50.625	49.375	16.812	Glass A Sash, Glass E Fixed	+50.0 / -70.0	+50.0 / -70.0	+50.0 / -70.0	+50.0 / -70.0	+50.0 / -63.1	+50.0 / -55.9	+49.4 / -49.4	+43.9 / -43.9	+38.8 / -38.8	+35.1 / -35.1
			Glass Type B, C, D, E, F, G, H	+50.0 / -70.0	+50.0 / -70.0	+50.0 / -70.0	+50.0 / -70.0	+50.0 / -70.0	+50.0 / -70.0	+50.0 / -66.1	+50.0 / -60.9	+50.0 / -54.3	+49.1 / -49.1
52.750	51.500	17.500	Glass A Sash, Glass E Fixed	+50.0 / -70.0	+50.0 / -70.0	+50.0 / -70.0	+50.0 / -70.0	+50.0 / -62.2	+50.0 / -55.5	+49.3 / -49.3	+43.9 / -43.9	+38.9 / -38.9	+35.0 / -35.0
			Glass Type B, C, D, E, F, G, H	+50.0 / -70.0	+50.0 / -70.0	+50.0 / -70.0	+50.0 / -70.0	+50.0 / -70.0	+50.0 / -70.0	+50.0 / -63.7	+50.0 / -59.4	+50.0 / -52.7	+47.7 / -47.7
56.750	55.500	18.875	Glass A Sash, Glass E Fixed	+50.0 / -70.0	+50.0 / -70.0	+50.0 / -70.0	+50.0 / -68.8	+50.0 / -60.3	+50.0 / -54.6	+48.7 / -48.7	+43.8 / -43.8	+39.0 / -39.0	+35.3 / -35.3
			Glass Type B, C, D, E, F, G, H	+50.0 / -70.0	+50.0 / -70.0	+50.0 / -70.0	+50.0 / -70.0	+50.0 / -68.2	+50.0 / -63.7	+50.0 / -60.2	+50.0 / -55.8	+50.0 / -50.2	+45.3 / -45.3
60.750	59.500	20.250	Glass A Sash, Glass E Fixed	+50.0 / -70.0	+50.0 / -70.0	+50.0 / -67.7	+50.0 / -62.8	+50.0 / -58.3	+50.0 / -52.4	+47.9 / -47.9	+43.2 / -43.2	+38.8 / -38.8	+35.4 / -35.4
			Glass Type B, C, D, E, F, G, H	+50.0 / -70.0	+50.0 / -70.0	+50.0 / -67.7	+50.0 / -62.8	+50.0 / -59.3	+50.0 / -57.3	+50.0 / -55.9	+50.0 / -52.6	+48.1 / -48.1	+43.3 / -43.3
63.000	61.750	21.000	Glass A Sash, Glass E Fixed	+50.0 / -70.0	+50.0 / -66.6	+50.0 / -63.5	+50.0 / -58.7	+50.0 / -55.1	+50.0 / -51.3	+47.2 / -47.2	+42.5 / -42.5	+38.7 / -38.7	+35.2 / -35.2
			Glass Type B, C, D, E, F, G, H	+50.0 / -70.0	+50.0 / -66.6	+50.0 / -63.5	+50.0 / -58.7	+50.0 / -55.1	+50.0 / -53.0	+50.0 / -51.6	+50.0 / -50.7	+45.8 / -45.8	+42.3 / -42.3
66.750	65.500	22.250	Glass A Sash, Glass E Fixed	+50.0 / -64.1	+50.0 / -60.5	+50.0 / -57.5	+50.0 / -52.8	+49.3 / -49.3	+47.1 / -47.1	+45.5 / -45.5	+42.4 / -42.4	+38.6 / -38.6	+35.2 / -35.2
			Glass Type B, C, D, E, F, G, H	+50.0 / -64.1	+50.0 / -60.5	+50.0 / -57.5	+50.0 / -52.8	+49.3 / -49.3	+47.1 / -47.1	+45.5 / -45.5	+44.5 / -44.5	+43.8 / -43.8	+40.0 / -40.0
68.750	67.500	22.938	Glass A Sash, Glass E Fixed	+50.0 / -61.1	+50.0 / -57.6	+50.0 / -54.7	+50.0 / -50.2	+46.7 / -46.7	+44.5 / -44.5	+42.8 / -42.8	+41.7 / -41.7	+38.6 / -38.6	+35.2 / -35.2
			Glass Type B, C, D, E, F, G, H	+50.0 / -61.1	+50.0 / -57.6	+50.0 / -54.7	+50.0 / -50.2	+46.7 / -46.7	+44.5 / -44.5	+42.8 / -42.8	+41.7 / -41.7	+41.0 / -41.0	+39.4 / -39.4
72.750	71.500	24.313	Glass A Sash, Glass E Fixed	+50.0 / -53.5	+50.0 / -51.1	+49.1 / -49.1	+45.6 / -45.6	+42.2 / -42.2	+40.0 / -40.0	+38.3 / -38.3	+37.0 / -37.0	+36.1 / -36.1	+35.2 / -35.2
			Glass Type B, C, D, E, F, G, H	+50.0 / -53.5	+50.0 / -51.1	+49.1 / -49.1	+45.6 / -45.6	+42.2 / -42.2	+40.0 / -40.0	+38.3 / -38.3	+37.0 / -37.0	+36.1 / -36.1	+35.6 / -35.6
76.000	74.750	25.438	Glass A Sash, Glass E Fixed	+48.1 / -48.1	+45.7 / -45.7	+43.8 / -43.8	+41.0 / -41.0	+39.1 / -39.1	+38.1 / -38.1	+37.7 / -37.7	+36.4 / -36.4	+35.5 / -35.5	+35.0 / -35.0
			Glass Type B, C, D, E, F, G, H	+48.1 / -48.1	+45.7 / -45.7	+43.8 / -43.8	+41.0 / -41.0	+39.1 / -39.1	+38.1 / -38.1	+37.7 / -37.7	+36.4 / -36.4	+35.5 / -35.5	+35.0 / -35.0
80.750	79.500	27.000	Glass A Sash, Glass E Fixed	+37.1 / -37.1	+36.1 / -36.1	+35.4 / -35.4	+35.0 / -35.0	+35.0 / -35.0	+35.0 / -35.0	+35.0 / -35.0	+35.0 / -35.0	+35.0 / -35.0	+35.0 / -35.0
			Glass Type B, C, D, E, F, G, H	+37.1 / -37.1	+36.1 / -36.1	+35.4 / -35.4	+35.0 / -35.0	+35.0 / -35.0	+35.0 / -35.0	+35.0 / -35.0	+35.0 / -35.0	+35.0 / -35.0	+35.0 / -35.0
84.750	83.500	28.375	Glass A Sash, Glass E Fixed	+37.1 / -37.1	+36.1 / -36.1	+35.4 / -35.4	+35.0 / -35.0	+35.0 / -35.0	+35.0 / -35.0	+35.0 / -35.0	+35.0 / -35.0	+35.0 / -35.0	+35.0 / -35.0
			Glass Type B, C, D, E, F, G, H	+37.1 / -37.1	+36.1 / -36.1	+35.4 / -35.4	+35.0 / -35.0	+35.0 / -35.0	+35.0 / -35.0	+35.0 / -35.0	+35.0 / -35.0	+35.0 / -35.0	+35.0 / -35.0
88.750	87.500	29.750	Glass A Sash, Glass E Fixed	+37.1 / -37.1	+36.1 / -36.1	+35.4 / -35.4	+35.0 / -35.0	+35.0 / -35.0	+35.0 / -35.0	+35.0 / -35.0	+35.0 / -35.0	+35.0 / -35.0	+35.0 / -35.0
			Glass Type B, C, D, E, F, G, H	+37.1 / -37.1	+36.1 / -36.1	+35.4 / -35.4	+35.0 / -35.0	+35.0 / -35.0	+35.0 / -35.0	+35.0 / -35.0	+35.0 / -35.0	+35.0 / -35.0	+35.0 / -35.0
92.250	91.000	30.938	Glass A Sash, Glass E Fixed	+37.1 / -37.1	+36.1 / -36.1	+35.4 / -35.4	+35.0 / -35.0	+35.0 / -35.0	+35.0 / -35.0	+35.0 / -35.0	+35.0 / -35.0	+35.0 / -35.0	+35.0 / -35.0
			Glass Type B, C, D, E, F, G, H	+37.1 / -37.1	+36.1 / -36.1	+35.4 / -35.4	+35.0 / -35.0	+35.0 / -35.0	+35.0 / -35.0	+35.0 / -35.0	+35.0 / -35.0	+35.0 / -35.0	+35.0 / -35.0

NOTES:

1. IF SIZE INTENDED IS NOT SHOWN, USE NEXT LARGER SIZE.
2. IF INSTALLATION CLIPS ARE USED AT SPACING SHOWN ON SHEET 9, DP IS LIMITED TO +30/-30 PSF.

Custom C WINDOW SYSTEMS
1900 SW 44TH AVE.
OCALA, FLORIDA 34474
WWW.CWS.CC

3500 ALUM. SINGLE HUNG NON-IMPACT

REVISIONS

NO.:	DESCRIPTION:	BY:	DATE:
D	UPDATED TO 2015 FBC	EMK	02/16/15
C	UPDATED ANCHOR SCH. & DP CHARTS		08/13/13
B	CORRECTED DP CHARTS		02/15/12
A	UPDATED TO 2010 FBC		10/12/11

LUCAS ANDREW TURNER LICENSE No 58201 STATE OF FLORIDA PROFESSIONAL ENGINEER

2/23/2015

LUCAS A. TURNER, P.E.
FL PE # 58201
1239 JABARA AVE.
NORTH PORT, FL 34288
PH. 941-380-1574

SHEET DESCRIPTION: COMPARATIVE ANALYSIS - ORIEL

DRAWN BY:	DATE:
ADE	03/16/09
DWG #: CWS-466	REV.: D
SCALE: 1:1	SHEET 5 OF 11

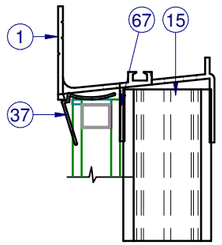

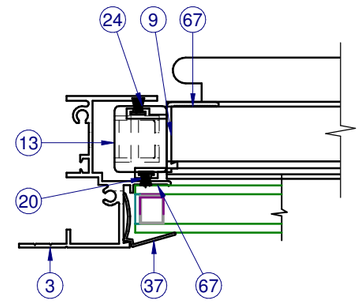

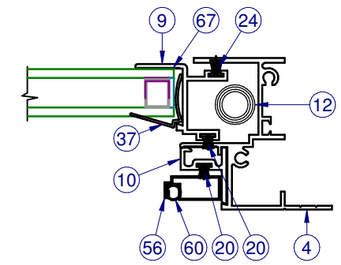

EXTERIOR

NOTE: LEFT SIDE SHOWS FIXED SECTION VIEW,
RIGHT SIDE SHOWS SASH SECTION VIEW

EXTERIOR

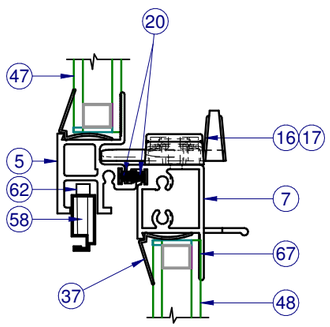

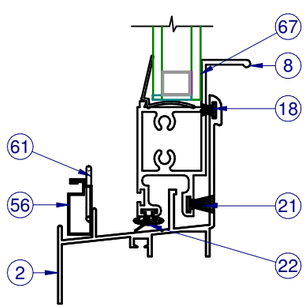

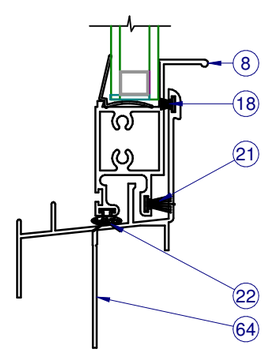

ALT, FIN FRAME

NOTE: ITEMS 11, 14, 23, 26-32, 34, 35, 42, 43-46, 59, 63, 65, 66 ARE USED BUT NOT SHOWN FOR CLARITY.

Custom C WINDOW SYSTEMS
1900 SW 44TH AVE.
OCALA, FLORIDA 34474
WWW.CWS.CC

3500 ALUM. SINGLE HUNG NON-IMPACT

REVISIONS

NO.:	DESCRIPTION:	BY:	DATE:
D	UPDATED TO 2015 FBC	EMK	02/16/15
C	UPDATED ANCHOR SCH. & DP CHARTS		08/13/13
B	CORRECTED DP CHARTS		02/15/12
A	UPDATED TO 2010 FBC		10/12/11

LUCAS ANDREW TURNER
LICENSE
No 58201
STATE OF FLORIDA
PROFESSIONAL ENGINEER

2/23/2015

LUCAS A. TURNER, P.E.
FL PE # 58201
1239 JABARA AVE.
NORTH PORT, FL 34288
PH. 941-380-1574

SHEET DESCRIPTION:
SECTION VIEWS - ALTERNATE FIN FRAME

DRAWN BY:	DATE:
ADE	03/16/09
DWG #: CWS-466	REV.: D
SCALE: 1:2	SHEET 6 OF 11

Item	Part #	Description	Vendor	Material
1	S-1326	Fr. Head, Flg. Head	Keymark	Aluminum
2	S-1182	Fr. Sill, Flg., Sill	Keymark	Aluminum
3	S-1077	Fr. Jamb, Flg., L. Jb.	Keymark	Aluminum
4	S-1077	Fr. Jamb, Flg., R. Jb.	Keymark	Aluminum
5	H-1563	Fxd. Mtg. Rail	Keymark	Aluminum
7	H-1072	Sash Meet. Rail	Keymark	Aluminum
8	H-1181	Sash Bot./Pull Rail	Keymark	Aluminum
9	S-1073	Sash Side/Top Rail	Keymark	Aluminum
10	S-1074	Scrn. Adapt., w/o leg, Vert.	Keymark	Aluminum
11	S-1465	Install Clip	Keymark	Aluminum
12	P-3340	Balance	Caldwell	
13	P-3040	Sash Cam	M&M	
14	P-3046	Take Out Clip		
15	P-3043	Sash Stop	TeamPlas	
16	P-3037	Sweep Lock, RH	Lawrence	Nylon
17	P-3038	Sweep Lock, LH	Lawrence	Nylon
18	P-3305	Wstp., 0.270 x .187 back FinSeal, Black, SoftTouch	Ultrafab	Nylon
20	P-3303	Wstp., 0.190 x .187 back FinSeal, Gray, SoftTouch	Ultrafab	Nylon
21	P-3305	Wstp., 0.270 x .187 back FinSeal, Black, SoftTouch	Ultrafab	Nylon
22	P-3011	Wstp., 0.350 x .187 back, foam filled bulb w/wands	Ultrafab	Nylon
23	P-3303	Wstp., 0.190 x .187 back FinSeal, Gray, SoftTouch	Ultrafab	Nylon
24	P-3309	Wstp., 0.210 x .187 back FinSeal, Black, SoftTouch	Ultrafab	Nylon
26	P-3612	#8 x 1.000 w/ 1/4" lead Quad PH Type A SMS	Fastenal	Steel
28	P-3635	#8 x 0.750 Quad PH Type A SMS	Fastenal	Steel
29	P-3515	#8 x 0.625 Ph FH Type A SMS	Fastenal	Steel
30	P-3264	Gasket, Hd. & Sill at Jb., SH-3500	HO Prod	Closed Cel
33	P-3342	Seam Sealer, SM-5504	Schnee	
34	P-3373	Pad, Sill, SH-3500	Visor	Open Cell
36	P-3022	Glazing Bead, Single Glazed	Fla Scrn	Metal
37	P-3020	Glazing Bead, Insulated glass	TeamPlas	PVC
42	P-3352	Set. Blk., 85 Dur., 1/8" x 5/8" x 2" Lg.	Frank Lowe	
43	P-3641	SH-3500 Gold Cert. Label		
45	P-3881	Temporary Lbl. (NFRC/DP)		
46	P-3613	CWS Lbl. (logo)		
47		Glass, Fixed		
48		Glass, Sash		
56	P-3218	Screen Frame	Allmetal	Alum
58	P-3321	Screen Frame Corner Key	Allmetal	Alum
59	P-3581	Screen Cloth, 18 x 16 Fiberglass	Phifer	
60	P-3228	Screen Spline, .155 Dia., Blk.	Dapa	Nylon
61	P-3029	Screen Pull Tab	Summit	Steel
62	P-3033	Screen Spring, SS	FlaScrn	SS
63	S-1197	Install Clip, Curved	Keymark	Aluminum
66	S-1112	Fr. Head, Flange Archtop	Keymark	Aluminum
67		Instaglaze 3, Purfect Glaze "H", TremglazeS500	Dow,Henkel,Tremco	
68	S-1330	Fr. Head, Fin, Head	Keymark	Aluminum

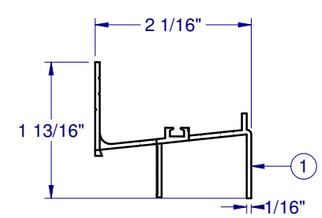

FLANGE HEAD S-1326

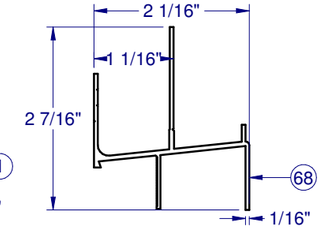

FIN HEAD S-1330

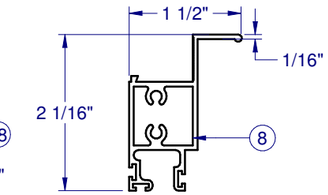

SASH BOTTOM RAIL H-1181

FRAME CORNER CONSTRUCTION

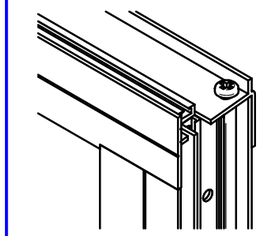

SASH CORNER CONSTRUCTION

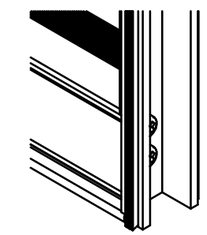

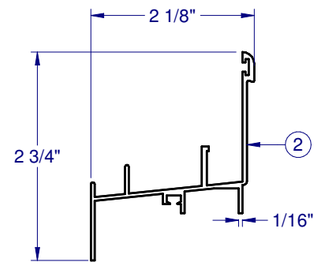

FLANGE SILL S-1182

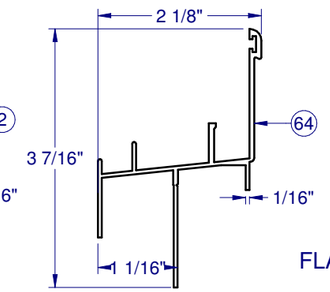

FIN SILL S-1180

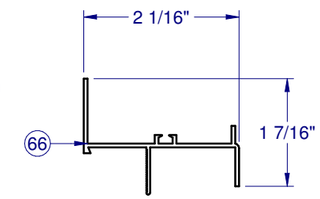

FLANGE HEAD, ARCHTOP S-1112

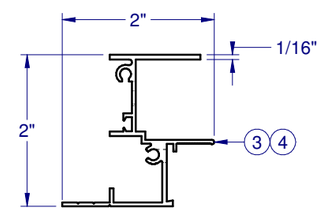

FLANGE JAMB S-1077

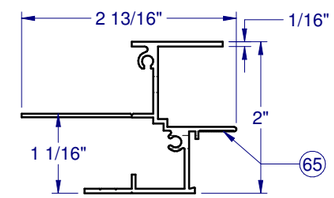

FIN JAMB S-1500

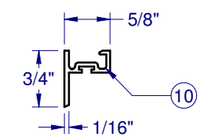

SCREEN ADAPTER S-1074

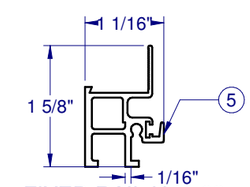

FIXED RAIL H-1563

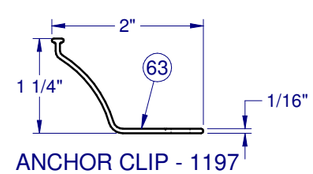

ANCHOR CLIP - 1197

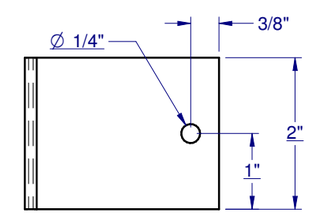

PLAN VIEW OF ANCHOR CLIP

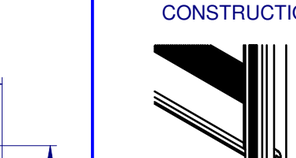

SASH SIDE RAIL S-1073

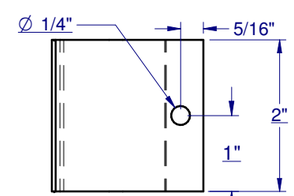

PLAN VIEW

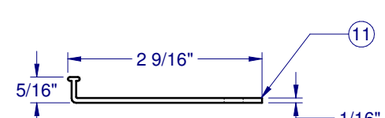

SILL ANCHOR CLIP S-1465

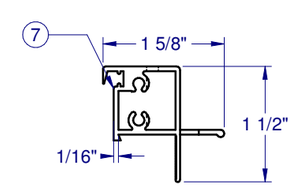

SASH TOP RAIL H-1072

LINE ITEMS NOT USED:
6,19,25,27,31,32,35,37-41,44,49-55,57

NOTE: ALL ALUMINUM EXTRUSION ARE 6063-T6

Custom C WINDOW SYSTEMS
1900 SW 44TH AVE.
OCALA, FLORIDA 34474
WWW.CWS.CC

3500 ALUM. SINGLE HUNG NON-IMPACT

REVISIONS

NO.:	DESCRIPTION:	BY:	DATE:
A	UPDATED TO 2010 FBC		10/12/11
B	CORRECTED DP CHARTS		02/15/12
C	UPDATED ANCHOR SCH. & DP CHARTS		08/13/13
D	UPDATED TO 2015 FBC	EMK	02/16/15

LUCAS ANDREW TURNER
LICENSE
No 58201
STATE OF FLORIDA
PROFESSIONAL ENGINEER

LUCAS A. TURNER, P.E.
FL PE # 58201
1239 JABARA AVE.
NORTH PORT, FL 34288
PH. 941-380-1574

SHEET DESCRIPTION:
BOM AND EXTRUSIONS

DRAWN BY:	DATE:
ADE	03/16/09
DWG #: CWS-466	REV.: D
SCALE: 1:2	SHEET 7 OF 11

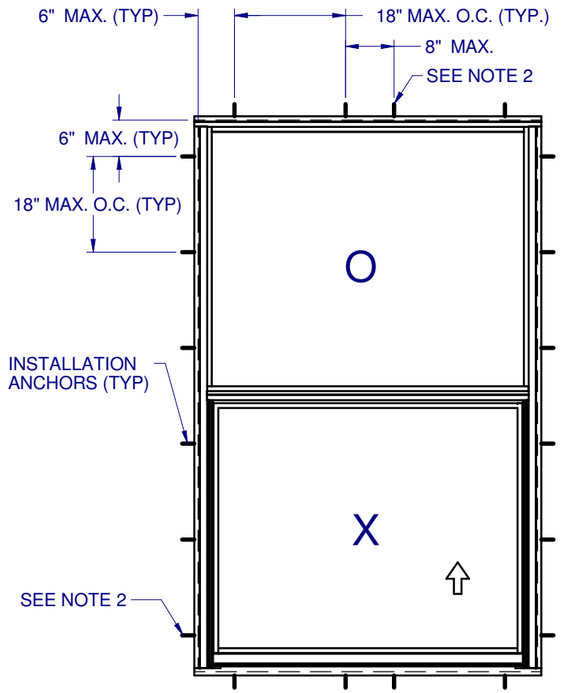

ANCHOR LAYOUT - (FLANGE) FOR DP CHART A
THRU FRAME OR CLIP (MASONRY OR WOOD OPENING)
DP LIMITED BY GLASS AND TESTED PRESSURE LIMITATIONS, SEE SHEET 5

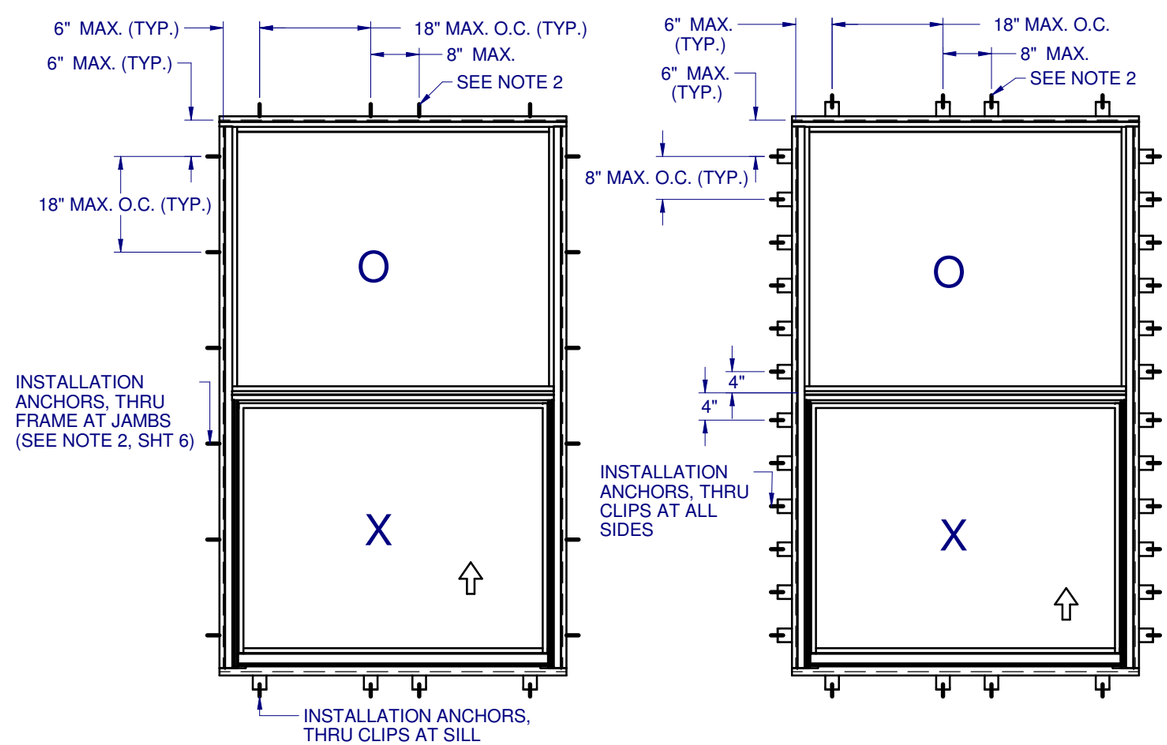

ANCHOR LAYOUT - (FLANGE) FOR DP CHART B
THRU FRAME OR CLIP (MASONRY OR WOOD OPENING)
DP LIMITED BY ANCHOR CLIPS, SEE SHEET 6

NOTES:

1. INSTALL ONE ANCHOR AT EACH LOCATION. SILL ANCHOR SPACING SAME AS HEAD.

2. SHIM AS REQ'D AT EACH SET OF INSTALLATION ANCHORS USING LOAD BEARING SHIMS. MAX. ALLOWABLE SHIM STACK TO BE 1/4". USE SHIMS WHERE SPACE GREATER THAN 1/16" IS PRESENT. LOAD BEARING SHIMS SHALL BE CONSTRUCTED OF HIGH DENSITY PLASTIC OR BETTER. WOOD SHIMS ARE NOT ALLOWED.

3. ANCHOR TYPE, SIZE, SPACING AND EMBEDMENT SHALL BE SPECIFIED IN THESE DRAWINGS, SEE TABLE 1, SHEET 10.

4. ALL INSTALLATION ANCHORS MUST BE MADE OF OR COATED WITH A CORROSION RESISTANT MATERIAL. DISSIMILAR MATERIALS OR MATERIALS IN CONTACT WITH PRESSURE TREATED WOOD MUST BE PROTECTED TO PREVENT REACTION.

5. INSTALLATION ANCHORS SHALL BE IN ACCORDANCE WITH ANCHOR MANUFACTURER'S INSTALLATION INSTRUCTIONS, AND ANCHORS SHALL NOT BE USED IN SUBSTRATES WITH STRENGTHS LESS THAN THE MINIMUM SPECIFIED IN TABLE 1, SHEET 10.

6. ANCHOR EMBEDMENT TO SUBSTRATE SHALL BE BEYOND WALL DRESSING OR STUCCO. FOR CONCRETE/CMU OPENINGS, EMBEDMENT SHALL BE BEYOND WOOD BUCKS, IF USED, AND INTO SUBSTRATE - 1X BUCKS ARE OPTIONAL.

7. A MINIMUM 3" CENTER-TO-CENTER SPACING SHALL BE MAINTAINED BETWEEN ALL MASONRY FASTENERS. A MINIMUM 1" CENTER-TO-CENTER SPACING SHALL BE MAINTAINED BETWEEN ALL WOOD AND METAL FASTENERS.

8. WOOD OR MASONRY OPENINGS, BUCKS AND BUCK FASTENERS SHALL BE PROPERLY DESIGNED BY THE ARCHITECT OR ENGINEER OF RECORD AND INSTALLED TO TRANSFER WIND LOADS TO THE STRUCTURE. SUBSTRATES SHALL MEET THE MINIMUM STRENGTH REQUIREMENTS AS SHOWN IN TABLE 1, SHEET 10. CONCRETE AND MASONRY SUBSTRATES SHALL NOT BE CRACKED.

9. SEALING AND FLASHING STRATEGIES FOR OVERALL WATER RESISTANCE OF INSTALLATION SHALL BE DONE BY OTHERS FOLLOWING THE CURRENT VERSION OF THE REFERENCE DOCUMENTS:
   FMA/AAMA 100(FIN WINDOWS), FMA/AAMA 200(FLANGE WINDOWS),
   FMA/WDMA 250(BOX WINDOWS), FMA/AAMA/WDMA 300(EXTERIOR DOORS).

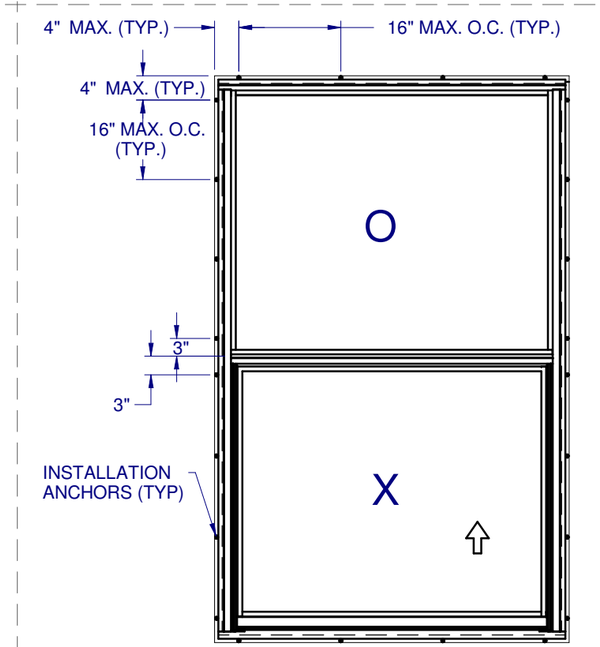

ANCHOR LAYOUT - (FIN) FOR DP CHART A
THRU NAILING FIN (WOOD OPENING)
DP LIMITED BY GLASS AND TESTED PRESSURE LIMITATIONS, SEE SHEET 5

Custom C WINDOW SYSTEMS
1900 SW 44TH AVE.
OCALA, FLORIDA 34474
WWW.CWS.CC

3500 ALUM. SINGLE HUNG NON-IMPACT

REVISIONS

NO.:	DESCRIPTION:	BY:	DATE:
D	UPDATED TO 2015 FBC	EMK	02/16/15
C	UPDATED ANCHOR SCH. & DP CHARTS		08/13/13
B	CORRECTED DP CHARTS		02/15/12
A	UPDATED TO 2010 FBC		10/12/11

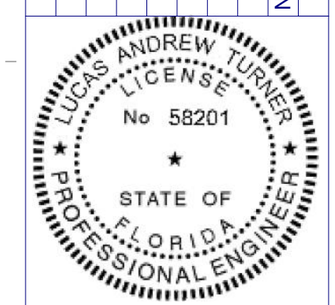

2/23/2015

LUCAS A. TURNER, P.E.
FL PE # 58201
1239 JABARA AVE.
NORTH PORT, FL 34288
PH. 941-380-1574

SHEET DESCRIPTION:
ANCHOR SCHEDULE AND NOTES - EQUAL SPLIT

DRAWN BY:	DATE:
ADE	03/16/09
DWG #: CWS-466	REV.: D
SCALE: 1:25	SHEET 8 OF 11

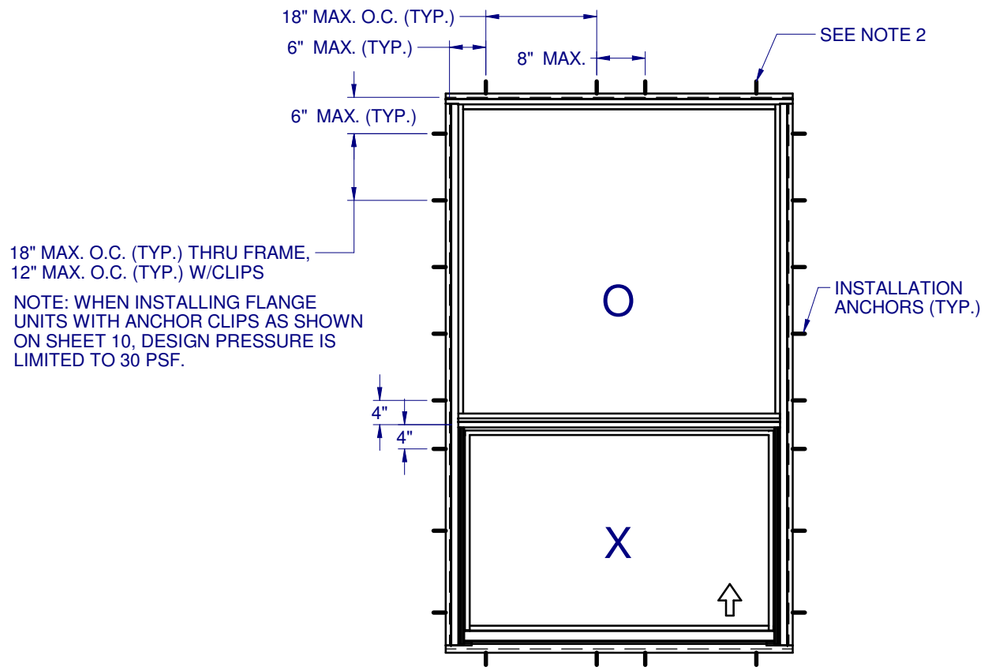

ANCHOR LAYOUT - (FLANGE) FOR DP CHART C
THRU FRAME OR CLIP (MASONRY OR WOOD OPENING)
DP LIMITED BY GLASS, SEE SHEET 7

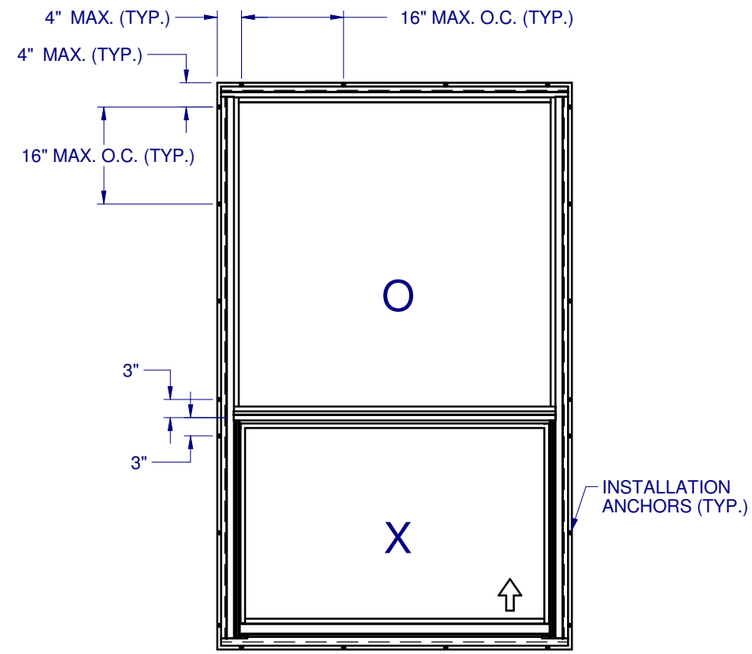

ANCHOR LAYOUT - (FIN) FOR DP CHART C
THRU NAILING FIN (WOOD OPENING), SEE SHEET 7

NOTES:

1. INSTALL ONE ANCHOR AT EACH LOCATION. SILL ANCHOR SPACING SAME AS HEAD.

2. SHIM AS REQ'D AT EACH SET OF INSTALLATION ANCHORS USING LOAD BEARING SHIMS. MAX. ALLOWABLE SHIM STACK TO BE 1/4". USE SHIMS WHERE SPACE GREATER THAN 1/16" IS PRESENT. LOAD BEARING SHIMS SHALL BE CONSTRUCTED OF HIGH DENSITY PLASTIC OR BETTER. WOOD SHIMS ARE NOT ALLOWED.

3. ANCHOR TYPE, SIZE, SPACING AND EMBEDMENT SHALL BE SPECIFIED IN THESE DRAWINGS, SEE TABLE 1, SHEET 10.

4. ALL INSTALLATION ANCHORS MUST BE MADE OF OR COATED WITH A CORROSION RESISTANT MATERIAL. DISSIMILAR MATERIALS OR MATERIALS IN CONTACT WITH PRESSURE TREATED WOOD MUST BE PROTECTED TO PREVENT REACTION.

5. INSTALLATION ANCHORS SHALL BE IN ACCORDANCE WITH ANCHOR MANUFACTURER'S INSTALLATION INSTRUCTIONS, AND ANCHORS SHALL NOT BE USED IN SUBSTRATES WITH STRENGTHS LESS THAN THE MINIMUM SPECIFIED IN TABLE 1, SHEET 10.

6. ANCHOR EMBEDMENT TO SUBSTRATE SHALL BE BEYOND WALL DRESSING OR STUCCO. FOR CONCRETE/CMU OPENINGS, EMBEDMENT SHALL BE BEYOND WOOD BUCKS, IF USED, AND INTO SUBSTRATE - 1X BUCKS ARE OPTIONAL.

7. A MINIMUM 3" CENTER-TO-CENTER SPACING SHALL BE MAINTAINED BETWEEN ALL MASONRY FASTENERS. A MINIMUM 1" CENTER-TO-CENTER SPACING SHALL BE MAINTAINED BETWEEN ALL WOOD AND METAL FASTENERS.

8. WOOD OR MASONRY OPENINGS, BUCKS AND BUCK FASTENERS SHALL BE PROPERLY DESIGNED BY THE ARCHITECT OR ENGINEER OF RECORD AND INSTALLED TO TRANSFER WIND LOADS TO THE STRUCTURE. SUBSTRATES SHALL MEET THE MINIMUM STRENGTH REQUIREMENTS AS SHOWN IN TABLE 1, SHEET 10. CONCRETE AND MASONRY SUBSTRATES SHALL NOT BE CRACKED.

9. SEALING AND FLASHING STRATEGIES FOR OVERALL WATER RESISTANCE OF INSTALLATION SHALL BE DONE BY OTHERS FOLLOWING THE CURRENT VERSION OF THE REFERENCE DOCUMENTS:
   FMA/AAMA 100(FIN WINDOWS), FMA/AAMA 200(FLANGE WINDOWS),
   FMA/WDMA 250(BOX WINDOWS), FMA/AAMA/WDMA 300(EXTERIOR DOORS).

Custom C WINDOW SYSTEMS
1900 SW 44TH AVE.
OCALA, FLORIDA 34474
WWW.CWS.CC

3500 ALUM. SINGLE HUNG NON-IMPACT

REVISIONS

NO.:	DESCRIPTION:	BY:	DATE:
D	UPDATED TO 2015 FBC	EMK	02/16/15
C	UPDATED ANCHOR SCH. & DP CHARTS		08/13/13
B	CORRECTED DP CHARTS		02/15/12
A	UPDATED TO 2010 FBC		10/12/11

LUCAS ANDREW TURNER
LICENSE
No 58201
STATE OF FLORIDA
PROFESSIONAL ENGINEER

2/23/2015

LUCAS A. TURNER, P.E.
FL PE # 58201
1239 JABARA AVE.
NORTH PORT, FL 34288
PH. 941-380-1574

SHEET DESCRIPTION:
ANCHOR SCHEDULE AND NOTES - ORIEL

DRAWN BY:	DATE:
ADE	03/16/09
DWG #: CWS-466	REV.: D
SCALE: 1:25	SHEET 9 OF 11

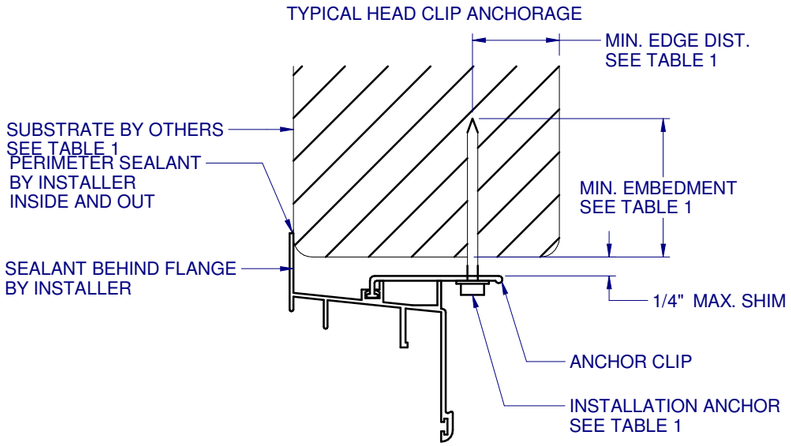

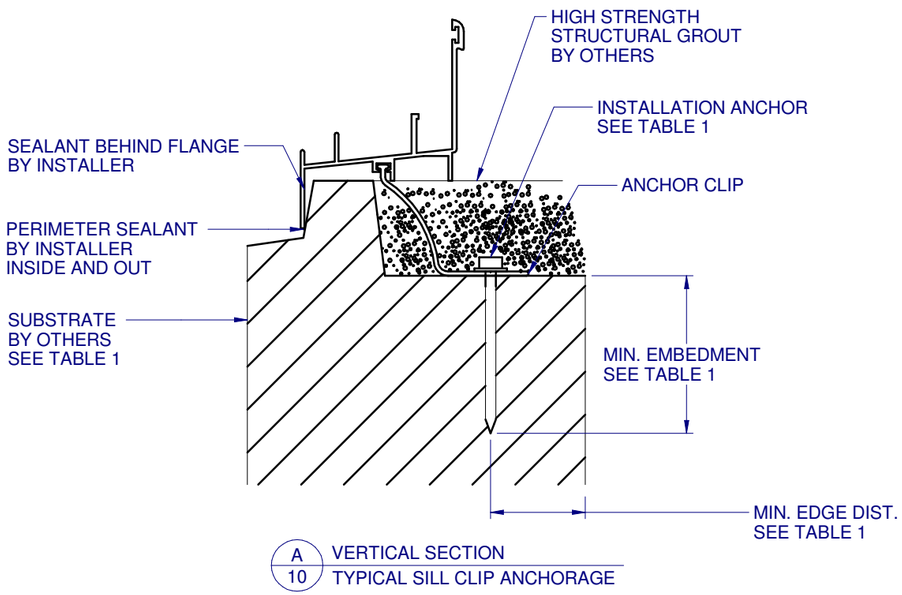

A/10 VERTICAL SECTION
TYPICAL SILL CLIP ANCHORAGE

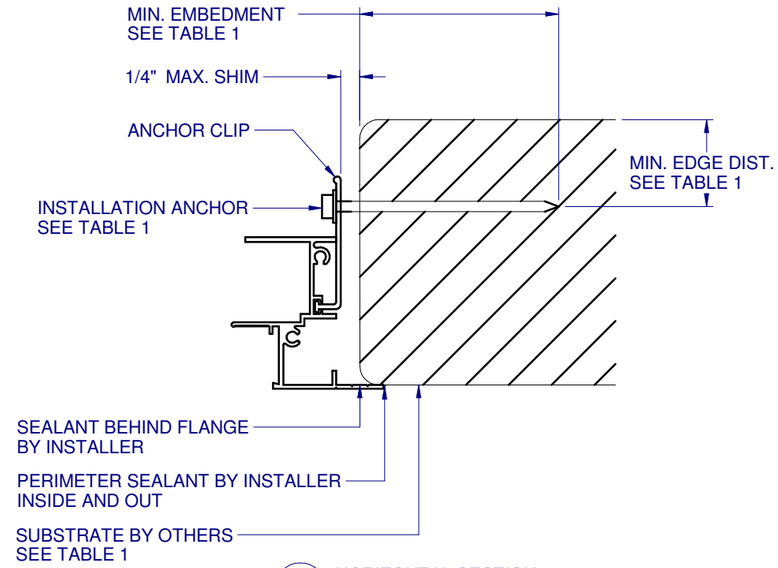

B/10 HORIZONTAL SECTION
TYPICAL JAMB CLIP ANCHORAGE

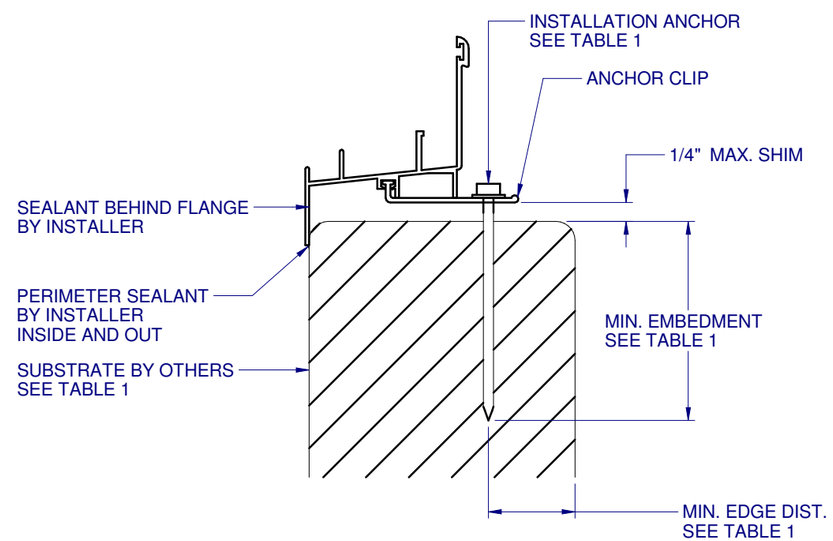

C/10 HORIZONTAL SECTION
ALTERNATE SILL CLIP ANCHORAGE

TABLE 1: APPROVED INSTALLATION FASTENERS

FRAME TYPE	SUBSTRATE TYPE	ANCHOR TYPE	MIN. EMBEDMENT	MIN. EDGE DIST.
FLANGE	CONCRETE (2.0 KSI MIN.)	3/16" ITW TAPCON	1"	1-1/8"
FLANGE	HOLLOW OR GROUT-FILLED CUM (117 PCF MIN.)	3/16" ITW TAPCON	1"	2"
FLANGE	CONCRETE (2.85 KSI MIN.)	3/16" ELCO ULTRACON	1"	1"
FLANGE	HOLLOW OR GROUT-FILLED CMU (ASTM C-90)	3/16" ELCO ULTRACON	1-1/4"	2-1/2"
FLANGE	2x MIN. SPRUCE-PINE-FIR WOOD (G=0.42 MIN.)	3/16" ITW TAPCON OR ELCO ULTRACON	1-3/8"	7/8"
FLANGE	2x MIN. SPRUCE-PINE-FIR WOOD (G=0.42 MIN.)	#10 WOOD SCREW	1-3/8"	7/8"
FLANGE	16 GAUGE (0.060") MIN. STEEL STUD (33 KSI YIELD MIN.)	#10-16 HILTI KWIK-FLEX OR ITW TEKS SELF-DRILLING	FULL THREAD THRU 0.060"	1/2"
FLANGE	1/8" ALUM. (6063-T5 MIN.) OR 1/8" STEEL (33 KSI MIN.)	#10 GRADE 5 SELF-TRAPPING / DRILLING SCREW	FULL THREAD THRU 0.125"	1/2"
FIN	2x MIN. SPRUCE-PINE-FIR WOOD (G=0.42 MIN.)	#8 WOOD SCREW	1-1/2"	7/16"

NOTE:
1. WHEN INSTALLING FLANGE UNITS WITH ANCHOR CLIPS AS SHOWN ON THIS SHEET, DESIGN PRESSURE IS LIMITED TO +/-30 PSF.

Custom C WINDOW SYSTEMS
1900 SW 44TH AVE.
OCALA, FLORIDA 34474
WWW.CWS.CC

3500 ALUM. SINGLE HUNG NON-IMPACT

REVISIONS

NO.:	DESCRIPTION:	DATE:	BY:
D	UPDATED TO 2015 FBC	02/16/15	EMK
C	UPDATED ANCHOR SCH. & DP CHARTS	08/13/13	
B	CORRECTED DP CHARTS	02/15/12	
A	UPDATED TO 2010 FBC	10/12/11	

LUCAS ANDREW TURNER
LICENSE
No 58201
STATE OF FLORIDA
PROFESSIONAL ENGINEER

2/23/2015

LUCAS A. TURNER, P.E.
FL PE # 58201
1239 JABARA AVE.
NORTH PORT, FL 34288
PH. 941-380-1574

SHEET DESCRIPTION:
INSTALLATION DETAIL - CLIPS

DRAWN BY:	DATE:
ADE	03/16/09
DWG #: CWS-466	REV.: D
SCALE: 1:2	SHEET 10 OF 11

TYPICAL HEAD ANCHORAGE

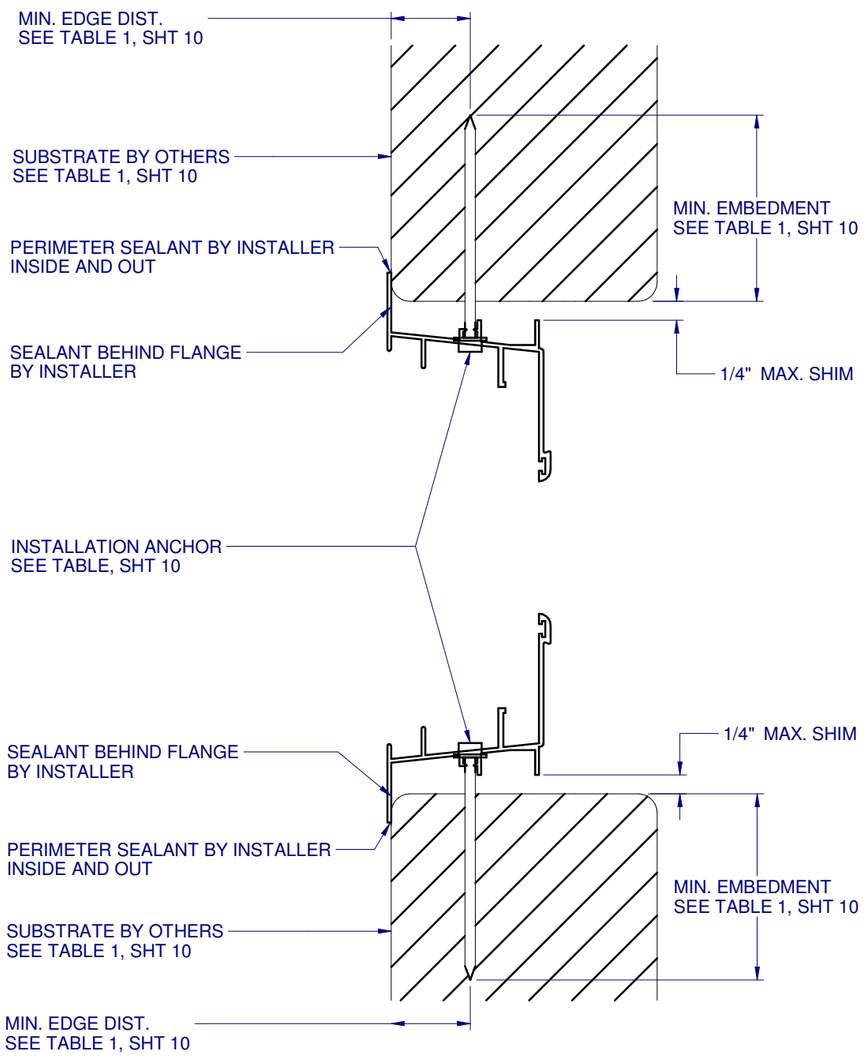

D / 11 VERTICAL SECTION
TYPICAL SILL ANCHORAGE

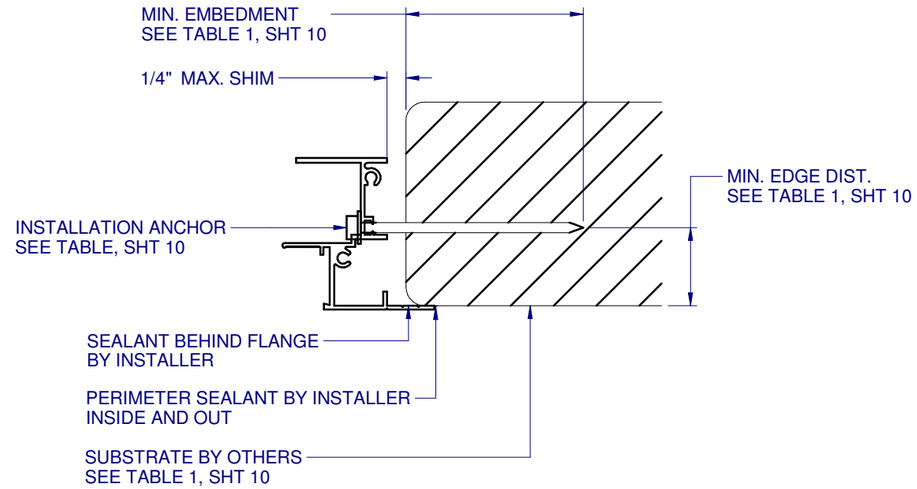

E / 11 HORIZONTAL SECTION
TYPICAL JAMB ANCHORAGE

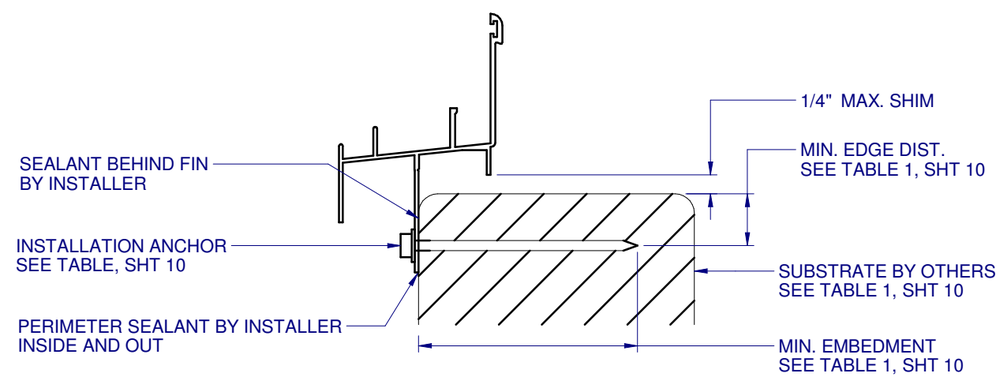

F / 11 VERTICAL SECTION
ALTERNATE FIN ANCHORAGE
TYP. FOR HEAD, SILL AND JAMBS

Custom C WINDOW SYSTEMS
1900 SW 44TH AVE.
OCALA, FLORIDA 34474
WWW.CWS.CC

3500 ALUM. SINGLE HUNG NON-IMPACT

REVISIONS

NO.:	DESCRIPTION:	DATE:	BY:
D	UPDATED TO 2015 FBC	02/16/15	EMK
C	UPDATED ANCHOR SCH. & DP CHARTS	08/13/13	
B	CORRECTED DP CHARTS	02/15/12	
A	UPDATED TO 2010 FBC	10/12/11	

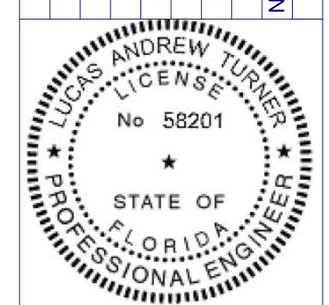

2/23/2015

LUCAS A. TURNER, P.E.
FL PE # 58201
1239 JABARA AVE.
NORTH PORT, FL 34288
PH. 941-380-1574

SHEET DESCRIPTION:
INSTALLATION DETAIL

DRAWN BY:	DATE:
ADE	03/16/09
DWG #: CWS-466	REV.: D
SCALE: 1:2	SHEET 11 OF 11