NOTES:

1. METAL POST TO BE GALVANIZED. ALL BOLTS, NUTS, WASHERS AND SCREWS MUST BE RUSTPROOF.
2. CONCRETE FOR FOOTING SHALL BE PORTLAND CEMENT AND HAVE A MINIMUM COMPRESSIVE STRENGTH OF 3,000 P.S.I.
3. SIGNS WILL BE FABRICATED BY USING REFLECTING COATING IN THE SYMBOL, MESSAGE AND BORDER APPLIED TO A SHEET ALUMINUM BACKING (.080) IN THICKNESS.
4. MESSAGE LETTERING SHALL BE UPPER CASE (BLACK)(SERIES C) 1.5" HIGH IN ACCORDANCE WITH MANUAL ON UNIFORM TRAFFIC CONTROL DEVICES. EXCEPT AS NOTED ON SHEET 2 OF 2.
5. THE SYMBOL IS COMPOSED OF TWO ELEMENTS, A WHITE WHEELCHAIR FIGURE (WHICH SHOULD ALWAYS FACE RIGHT) ON A SQUARE BACKGROUND, INTERNATIONAL BLUE IN COLOR (FED. STD. 595a, COLOR #15180).
6. SIGN POST SHALL BE MIN. 2'–0" CLEAR FROM BACK OF CURB.
7. THE USE OF PROPERLY LOCATED BOLLARDS IN ACCESSIBLE PARKING SPACES ARE ACCEPTABLE SUBSTITUTES FOR REGULAR BUMPER GUARD.
8. MINIMUM NUMBER OF ACCESSIBLE PARKING SPACES SHALL BE PER FLORIDA BUILDING CODE, ACCESSIBILITY, 7TH EDITION, SECTION 280.2.

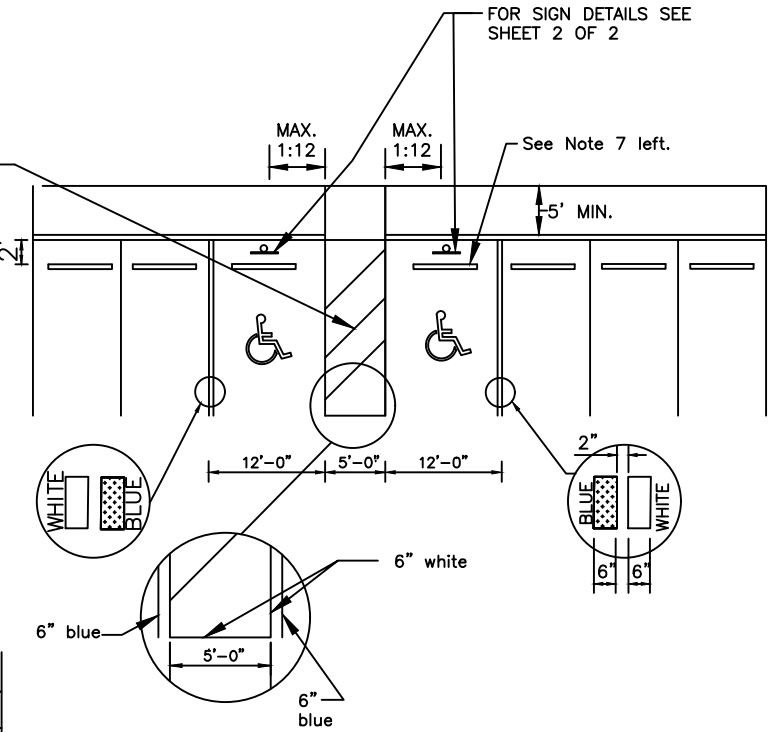

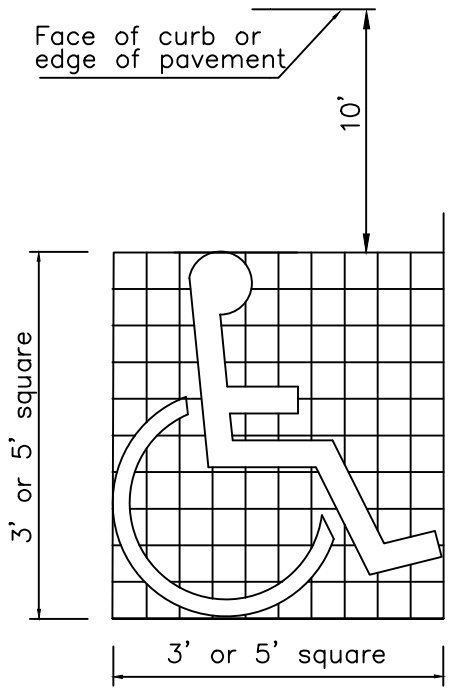

MANDATORY

White on Blue Background

REVISION DATE: 10/21	TRANSPORTATION TECHNICAL MANUAL	Hillsborough County Florida	DISABLED PARKING / PAVEMENT MARKING TYPICAL DETAILS	DRAWING NO. TD-1
				SHEET NO. 1 OF 2