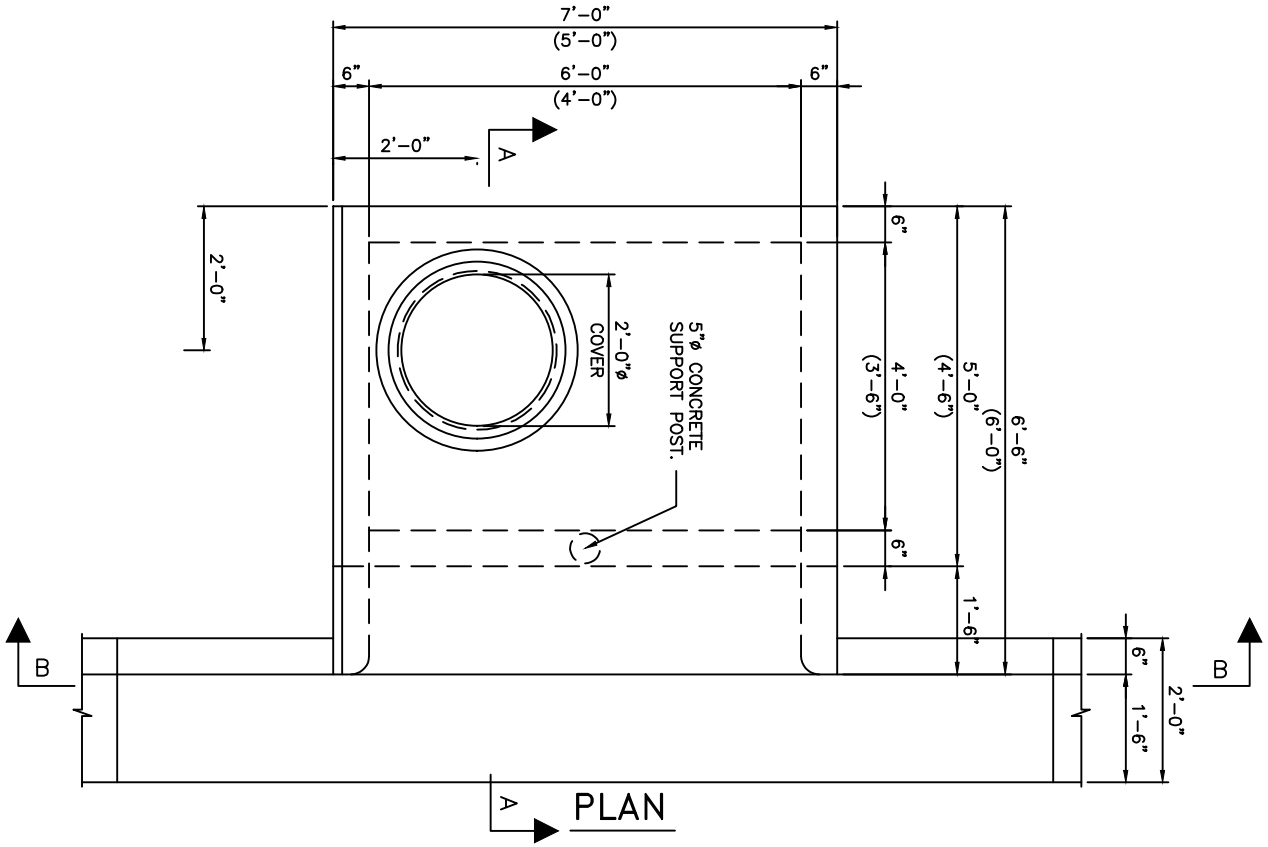

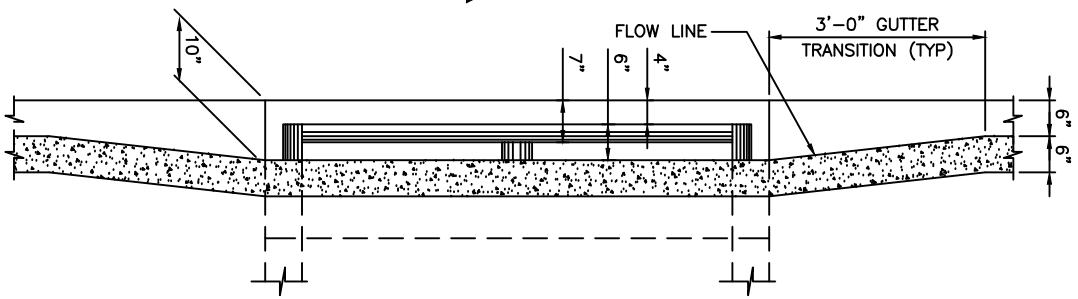

SECTION B-B

REVISION DATE: 12/08	TRANSPORTATION TECHNICAL MANUAL	Hillsborough County Florida	TYPE I INLET (1 OF 3) (ADJACENT TO CURB) PLAN AND ELEVATION	DRAWING NO. **TD-18** SHEET NO. 6 OF 14