CAROMA

Made For Life



Urbane

Collection

2024 Brochure



At Caroma, we believe bathrooms are more than just functional spaces – they're integral parts of our daily lives. For over 80 years, we have dedicated ourselves to creating purpose-built products and solutions that are designed for living and built for life.

As leaders in the industry, we put people at the heart of everything we do. The Caroma team is committed to developing inspiring and innovating products for all needs, using our knowledge and expertise to ensure every detail enhances the way we all live.



Our products have been designed and stringently tested at our dedicated Design and Innovation Centre in Sydney.



Enjoy peace of mind with extensive warranties across Caroma Collections, with up to 20 years warranty.



CAROMA
CLEANFLUSH®

Our patented rimless toilet technology delivers a whole bowl clean with no splashback.



CAROMA
GERMGARD®

A unique antimicrobial formula that kills harmful bacteria, preventing the spread of nasty germs.



CAROMA
UNI-ORBITAL® CONNECTOR

Our patented connectors overcome installation issues by allowing for a flexible 50mm radius for connection.



CAROMA
ADJUSTABLE FLUSHPIPE

Quickly realign the water inlet of your Invisi II in-wall cistern without damaging your wall.

*See www.caroma.com.au for full warranty details

CAROMA
Made For Life



The Urbane Collection sets a new benchmark in contemporary Australian design. Combining refined thin-edge details and a considered design language this extensive bathroom collection includes toilets, basins, tapware, accessories, showers and baths. Supported by a beautiful and highly durable palette of colour finishes, the collection can be tailored to suit a range of styles and tastes.

LIFETIME GUARANTEE

PVD FINISH

Superior PVD finishes provide excellent durability and enable complete personalisation, with limitless colour and finish mix-n-match opportunities.



CHROME | MATTE BLACK | BRUSHED BRASS | BRUSHED NICKEL | GUNMETAL

COLOUR

Find the perfect colour match for your bathroom, with colour finishes including PVD brushed brass, brushed nickel and gunmetal, as well as electroplated black and chrome.

DURABLE

HIGH QUALITY CERAMIC

The full Urbane Collection features carefully chosen materials to keep up with the hustle and bustle of daily life in the bathroom. Enjoy the benefits of highly durable ceramic across basins and toilets, easy to clean acrylic finishes for baths and high quality brass fixtures for showers and tapware.



VJET® – VARIABLE CONTROL SPRAY

A luxury shower experience that puts you in control. Use the slider to seamlessly transition from an invigorating shower spray through to a gentle mist, and everything in between.

Urbane Collection

Urbane Collection

CAROMA

Made For Life


CAROMA

Basins

Our Urbane II Collection basins feature a contemporary thin-rim design to make a fashionable statement in any modern bathroom. Urbane II basins include an integrated ceramic pop-up plug and waste which sits flush with basin when open.

For a seamless and clean design, explore our optional pop-up plug and wastes to match with your basin. Available in chrome, matte black, brushed nickel, brushed brass and gunmetal, these metallic plug and wastes provide a consistent design match with Urbane II tapware, showers and accessories.

INSET BASIN

Inset basins are partially set into a vanity reducing the appearance of the basin rim without reducing the depth of the bowl.

SEMI RECESSED BASIN

Semi recessed basins partially overhang the vanity allowing you to maximise your basin size on applications with limited vanity space.

ABOVE COUNTER BASIN

Above counter basins are installed directly on top of a vanity with minimal installation requirements.

WALL BASIN

Wall basins are installed directly to the wall with no need for an additional vanity.





EASY TO CLEAN





INTEGRATED DESIGN



HIGH QUALITY CERAMIC



THIN RIM DESIGN



URBANE II
INSET BASIN

No tap landing
878200W



URBANE II
INSET BASIN

No taphole
878300W



URBANE II
INSET BASIN

1 taphole
878310W



URBANE II
ABOVE COUNTER BASIN

No taphole
878400W



URBANE II
UNDER COUNTER BASIN

No taphole
878500W



URBANE II WALL BASIN

No taphole
878600W



URBANE II WALL BASIN

1 taphole
878610W



URBANE II LEFT HAND SHELF WALL BASIN

No taphole
878800W



URBANE II LEFT HAND SHELF WALL BASIN

1 taphole
878810W



URBANE II RIGHT HAND SHELF WALL BASIN

No taphole
878700W



URBANE II RIGHT HAND SHELF WALL BASIN

1 taphole
878710W



URBANE II
SEMI RECESSED BASIN

No taphole
878900W



URBANE II
SEMI RECESSED BASIN

1 taphole
878910W



URBANE II
HAND WALL BASIN

1 taphole
879010W

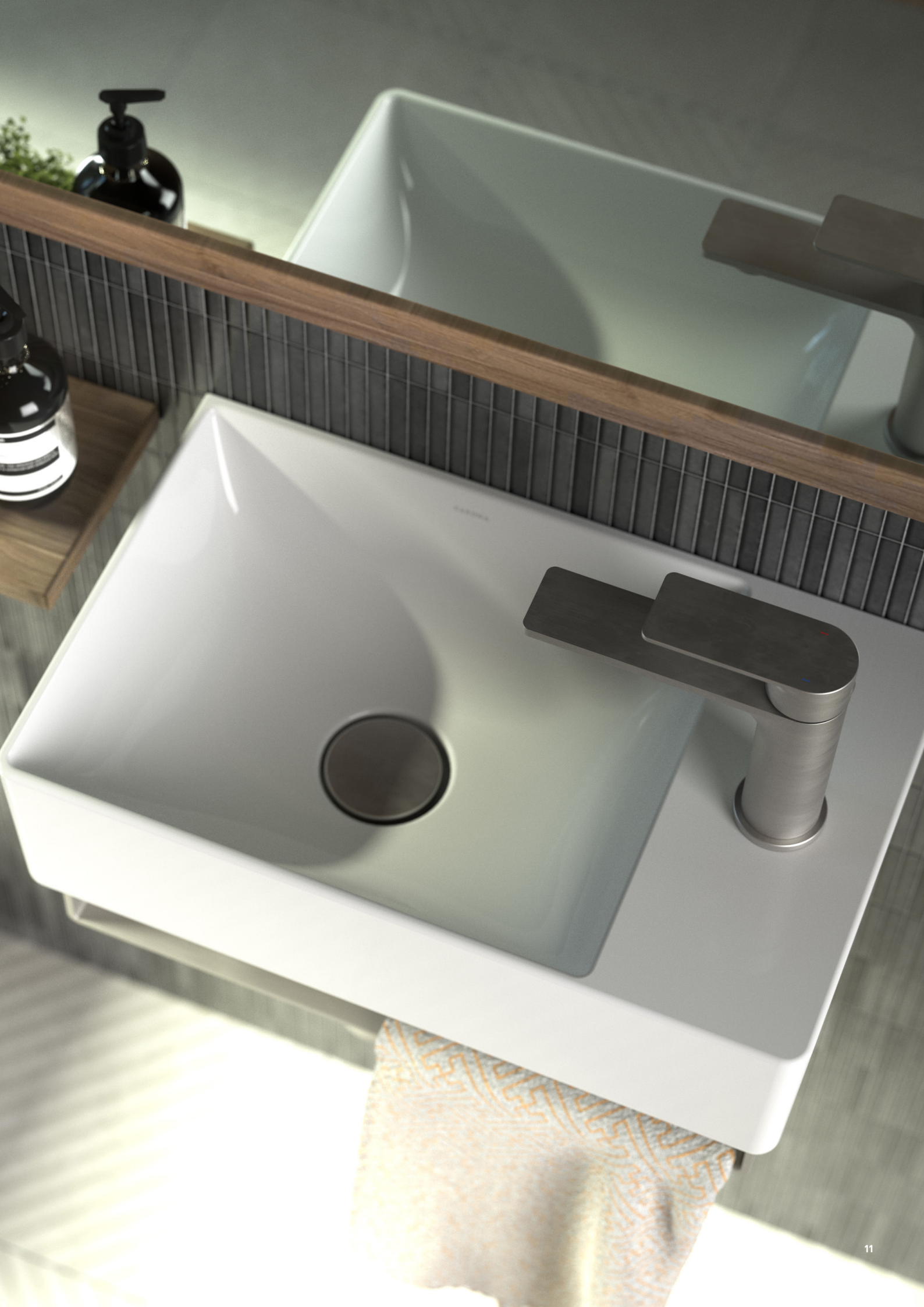



Bathroom Mixers

Embracing a distinctly modern Australian style, the Caroma Urbane II Tapware Collection is a combination of functional and design unity. The universal in-wall bodies fit every Urbane II mixer to give you the ultimate flexibility when choosing your bathroom fittings. Choose from a range of incredibly durable PVD finishes across Brushed Brass, Brushed Nickel, Gunmetal, alongside classic Chrome and Matte Black.

CAROMA
EASYSWITCH

The collection features Caroma EasySwitch®, the universal in-wall body system that gives you ultimate flexibility. The in-wall mixers have unique flexibility in that the trim kit, colour finish and design can all be interchanged pre or post installation – eliminating costly hold ups as well as allowing you to quickly and easily update the design, colour and style without costly rectification work. Trim kits are available in 5 colour finishes with 2 wall flange options - rectangular and round.

AUSTRALIAN DESIGNED AND ENGINEERED

CHROME | MATTE BLACK | BRUSHED BRASS | BRUSHED NICKEL | GUNMETAL

20 YEAR* WARRANTY

20 YEARS
PVD WARRANTY

LEAK TESTED

SUPERIOR HOSES



URBANE II BASIN MIXER

Chrome (Lead Free)
98608C6AF

Matte Black (Lead Free)
8608B6AF

Brushed Brass (Lead Free)
98608BB6AF

Brushed Nickel (Lead Free)
98608BN6AF

Gunmetal (Lead Free)
98608GM6AF

WELS 6 star rated, 4.5L/min



URBANE II MID TOWER BASIN MIXER

Chrome (Lead Free)
98620C6AF

Matte Black (Lead Free)
98620B6AF

Brushed Brass (Lead Free)
98620BB6AF

Brushed Nickel (Lead Free)
98620BN6AF

Gunmetal (Lead Free)
98620GM6AF

WELS 6 star rated, 4.5L/min



URBANE II TOWER BASIN MIXER

Chrome (Lead Free)
98609C6AF

Matte Black (Lead Free)
98609B6AF

Brushed Brass (Lead Free)
98609BB6AF

Brushed Nickel (Lead Free)
98609BN6AF

Gunmetal (Lead Free)
98609GM6AF

WELS 6 star rated, 4.5L/min



URBANE II FREESTANDING BATH FILLER

Chrome
98611C

Matte Black
98611B

Brushed Brass
98611BB

Brushed Nickel
98611BN

Gunmetal
98611GM



URBANE II BATH/SHOWER MIXER WITH DIVERTER - ROUND COVER PLATE

Chrome
99656C

Matte Black
99656B

Brushed Brass
99656BB

Brushed Nickel
99656BN

Gunmetal
99656GM



URBANE II BATH/SHOWER MIXER WITH DIVERTER - RECTANGULAR COVER PLATE

Chrome
99657C

Matte Black
99657B

Brushed Brass
99657BB

Brushed Nickel
99657BN

Gunmetal
99657GM



URBANE II BATH/SHOWER MIXER - ROUND COVER PLATE

Chrome
99648C

Matte Black
99648B

Brushed Brass
99648BB

Brushed Nickel
99648BN

Gunmetal
99648GM



URBANE II BATH/SHOWER MIXER - SQUARE COVER PLATE

Chrome
99649C

Matte Black
99649B

Brushed Brass
99649BB

Brushed Nickel
99649BN

Gunmetal
99649GM



URBANE II HOB BASIN MIXER SET 150MM

Chrome
99688C65A

Matte Black
99688B65A

Brushed Brass
99688BB65A

Brushed Nickel
99688BN65A

Gunmetal
99688GM65A

WELS 6 star rated, 4.5L/min, includes optional WELS 5 star rated, 6.0L/min



URBANE II HOB BASIN/SINK MIXER SET 210MM

Chrome
99689C65A

Matte Black
99689B65A

Brushed Brass
99689BB65A

Brushed Nickel
99689BN65A

Gunmetal
99689GM65A

WELS 6 star rated, 4.5L/min, includes optional WELS 5 star rated, 6.0L/min



URBANE II 220MM BATH SWIVEL OUTLET - ROUND COVER PLATE

Chrome
99669C

Matte Black
99669B

Brushed Brass
99669BB

Brushed Nickel
99669BN

Gunmetal
99669GM



URBANE II 220MM BATH SWIVEL OUTLET - SQUARE COVER PLATE

Chrome
99670C

Matte Black
99670B

Brushed Brass
99670BB

Brushed Nickel
99670BN

Gunmetal
99670GM





URBANE II 180MM BASIN/BATH OUTLET - ROUND COVER PLATE

Chrome (Lead Free)
99665C6AF

Matte Black (Lead Free)
99665B6AF

Brushed Brass (Lead Free)
99665BB6AF

Brushed Nickel (Lead Free)
99665BN6AF

Gunmetal (Lead Free)
99665GM6AF

WELS 6 star rated, 4.5L/min



URBANE II 180MM BASIN/BATH OUTLET - SQUARE COVER PLATE

Chrome (Lead Free)
99666C6AF

Matte Black (Lead Free)
99666B6AF

Brushed Brass (Lead Free)
99666BB6AF

Brushed Nickel (Lead Free)
99666BN6AF

Gunmetal (Lead Free)
99666GM6AF

WELS 6 star rated, 4.5L/min

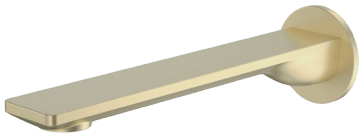

URBANE II 220MM BASIN/BATH OUTLET - ROUND COVER PLATE

Chrome (Lead Free)
99667C6AF

Matte Black (Lead Free)
99667B6AF

Brushed Brass (Lead Free)
99667BB6AF

Brushed Nickel (Lead Free)
99667BN6AF

Gunmetal (Lead Free)
99667GM6AF

WELS 6 star rated, 4.5L/min



URBANE II 220MM BASIN/BATH OUTLET - SQUARE COVER PLATE

Chrome (Lead Free)
99668C6AF

Matte Black (Lead Free)
99668B6AF

Brushed Brass (Lead Free)
99668BB6AF

Brushed Nickel (Lead Free)
99668BN6AF

Gunmetal (Lead Free)
99631GM6AF

WELS 6 star rated, 4.5L/min



URBANE II 180MM WALL BASIN/BATH MIXER - ROUND COVER PLATE

Chrome (Lead Free)
99631C6AF

Matte Black (Lead Free)
99631B6AF

Brushed Brass (Lead Free)
99631BB6AF

Brushed Nickel (Lead Free)
99631BN6AF

Gunmetal (Lead Free)
99631GM6AF

WELS 6 star rated, 4.5L/min

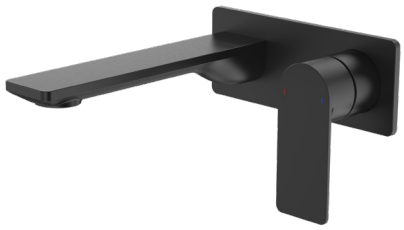

URBANE II 180MM WALL BASIN/BATH MIXER - RECTANGULAR COVER PLATE

Chrome (Lead Free)
99632C6AF

Matte Black (Lead Free)
99632B6AF

Brushed Brass (Lead Free)
99632BB6AF

Brushed Nickel (Lead Free)
99632BN6AF

Gunmetal (Lead Free)
99632GM6AF

WELS 6 star rated, 4.5L/min

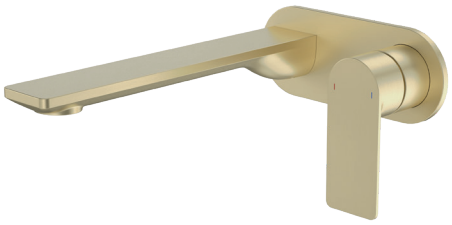

URBANE II 220MM WALL BASIN/BATH MIXER - ROUND COVER PLATE

Chrome (Lead Free)
99641C6AF

Matte Black (Lead Free)
99641B6AF

Brushed Brass (Lead Free)
99641BB6AF

Brushed Nickel (Lead Free)
99641BN6AF

Gunmetal (Lead Free)
99641GM6AF

WELS 6 star rated, 4.5L/min



URBANE II 220MM WALL BASIN/BATH MIXER - RECTANGULAR COVER PLATE

Chrome (Lead Free)
99642C6AF

Matte Black (Lead Free)
99642B6AF

Brushed Brass (Lead Free)
99642BB6AF

Brushed Nickel (Lead Free)
99642BN6AF

Gunmetal (Lead Free)
99642GM6AF

WELS 6 star rated, 4.5L/min

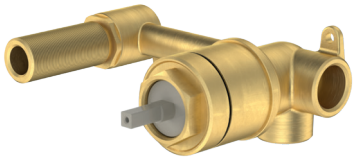

CAROMA EASYSWITCH
UNIVERSAL WALL BASIN/BATH MIXER INWALL BODY

(Lead Free)
99635F



CAROMA EASYSWITCH
UNIVERSAL BATH/SHOWER MIXER INWALL BODY

(Lead Free)
99651F



CAROMA EASYSWITCH
UNIVERSAL BATH/SHOWER MIXER
WITH DIVERTER INWALL BODY

99659



UNIVERSAL HOB MIXER BODY

(Lead Free)
99687F





Showers

Your shower is one of the most important features of your bathroom and the slim, sleek design of Urbane II showers is perfect for an effortless modern design. Choosing the right type of shower for your family will ensure a luxurious showering experience every time. Premium quality flow regulators will deliver a consistent flow of water under a range of water pressures and the smooth shower hose means durability and easy cleaning.



VJET® – VARIABLE CONTROL SPRAY

A luxury shower experience that puts you in control. Use the slider to seamlessly transition from an invigorating shower spray through to a gentle mist, and everything in between.





CHROME | MATTE BLACK | BRUSHED BRASS | BRUSHED NICKEL | GUNMETAL





PVD WARRANTY



LEAK TESTED

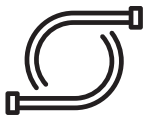

SUPERIOR HOSES



URBANE II RAIL SHOWER WITH 300MM OVERHEAD

Chrome
99630C3A

Matte Black
99630B3A

Brushed Brass
99630BB3A

Brushed Nickel
99630BN3A

Gunmetal
99630GM3A

WELS (Overhead) 3 star rated, 9.0L/min

WELS (Hand) 4 star rated, 7.5L/min



URBANE II RAIL SHOWER WITH 200MM OVERHEAD

Chrome
99660C4E

Matte Black
99660B4E

Brushed Brass
99660BB4E

Brushed Nickel
99660BN4E

Gunmetal
99660GM4E

WELS Overhead
4 star rated, 6.5L/min

WELS Hand
4 star rated, 6.5L/min



URBANE II COMPACT TWIN SHOWER

Chrome
99632C3A

Matte Black
99632B3A

Brushed Brass
99632BB3A

Brushed Nickel
99632BN3A

Gunmetal
99632GM3A

WELS Overhead
3 star rated, 9.0L/min

WELS Hand
4 star rated, 7.5L/min



URBANE II RAIL SHOWER

Chrome
99631C4E

Matte Black
99631B4E

Brushed Brass
99631BB4E

Brushed Nickel
99631BN4E

Gunmetal
99631GM4E

WELS Hand
4 star rated, 7.5L/min



URBANE II HAND SHOWER

Chrome
99633C4E

Matte Black
99633B4E

Brushed Brass
99633BB4E

Brushed Nickel
99633BN4E

Gunmetal
99633GM4E

WELS Hand
4 star rated, 7.5L/min



URBANE II HAND SHOWER (HANDSET ONLY)

Chrome
99643C4E

Matte Black
99643B4E

Brushed Brass
99643BB4E

Brushed Nickel
99643BN4E

Gunmetal
99643GM4E

WELS Hand
4 star rated, 7.5L/min



URBANE II 415MM RIGHT ANGLED SHOWER ARM

Chrome
99641C

Matte Black
99641B

Brushed Brass
99641BB

Brushed Nickel
99641BN

Gunmetal
99641GM



URBANE II 460MM UPSWEPT SHOWER ARM

Chrome
99642C

Matte Black
99642B

Brushed Brass
99642BB

Brushed Nickel
99642BN

Gunmetal
99642GM



URBANE II 200MM CEILING SHOWER ARM

Chrome
99658C

Matte Black
99658B

Brushed Brass
99658BB

Brushed Nickel
99658BN

Gunmetal
99658GM



URBANE II 300MM CEILING SHOWER ARM

Chrome
99639C

Matte Black
99639B

Brushed Brass
99639BB

Brushed Nickel
99639BN

Gunmetal
99639GM



URBANE II 500MM CEILING SHOWER ARM

Chrome
99640C

Matte Black
99640B

Brushed Brass
99640BB

Brushed Nickel
99640BN

Gunmetal
99640GM



URBANE II 200MM ROUND RAIN SHOWER (4 STAR)

Chrome
99663C4E

Matte Black
99663B4E

Brushed Brass
99663BB4E

Brushed Nickel
99663BN4E

Gunmetal
99663GM4E

WELS Overhead 4 star rated, 7.5L/min



URBANE II 200MM SQUARE RAIN SHOWER (4 STAR)

Chrome
99664C4E

Matte Black
99664B4E

Brushed Brass
99664BB4E

Brushed Nickel
99664BN4E

Gunmetal
99664GM4E

WELS Overhead 4 star rated, 7.5L/min



URBANE II 300MM ROUND RAIN SHOWER

Chrome
99634C3A

Matte Black
99634B3A

Brushed Brass
99634BB3A

Brushed Nickel
99634BN3A

Gunmetal
99634GM3A

WELS 3 star rated (Range D), 9.0L/min



URBANE II 300MM SQUARE RAIN SHOWER

Chrome
99655C3A

Matte Black
99655B3A

Brushed Brass
99655BB3A

Brushed Nickel
99655BN3A

Gunmetal
99655GM3A

WELS 3 star rated (Range D), 9.0L/min





Baths

Our Urbane II baths feature a seamless design, complete with an offset waste for a comfortable bathing experience. Available in a luxurious free-standing or practical space saving back-to-wall style. Baths are available in a range of sizes to fit your bathroom needs.





ACRYLIC





MULTIPLE CONFIGURATIONS



INTEGRATED DESIGN



STAIN RESISTANT



URBANE II
1600 FREESTANDING BATH

AU6W



URBANE II
1800 FREESTANDING BATH

AU8W



URBANE II
1500 BACK TO CORNER BATH (LEFT HAND SIDE AND RIGHT HAND SIDE OPTIONS AVAILABLE) AVAILABLE JUN 2024

Left Hand: UII5LHCW
Right Hand: UII5RHCW



URBANE II
1700 BACK TO CORNER BATH (LEFT HAND SIDE AND RIGHT HAND SIDE OPTIONS AVAILABLE) AVAILABLE JUN 2024

Left Hand: UII7LHCW
Right Hand: UII7RHCW



URBANE II
1400 BACK TO WALL FREESTANDING BATH

AU4WFW



URBANE II
1600 BACK TO WALL FREESTANDING BATH

AU6WFW



URBANE II
1800 BACK TO WALL FREESTANDING BATH

AU8WFW



Toilet Suites

Our Urbane II Collection of toilets have a contemporary low-profile design to match the Urbane II basins, baths, showers and tapware.

Urbane II toilets feature Caroma Cleanflush® technology, our most effective and hygienic toilet. Our patented design features revolutionary rimless technology that delivers the next generation of toilets; easy to clean and water efficient with superior hygiene.

In addition, toilets have added Caroma GermGard® antimicrobial protection and have the option of coloured seat hinge caps for a consistent look across your bathroom.

AUSTRALIAN DESIGNED AND ENGINEERED

20 YEAR* WARRANTY

CAROMA
CLEANFLUSH®

CAROMA
GERMGARD®

Applied to seat

400KG
LOAD TESTED

CAROMA
UNI-ORBITAL® CONNECTOR

CAROMA
ADJUSTABLE FLUSHPIPE

EASY CLEAN DROP ZONE

SOFT CLOSE



CAROMA
CLEANFLUSH®

Our most effective and hygienic toilet technology.

By removing the rim of the bowl, there is now nowhere for germs to hide. And by adding Caroma's flush and flow features we've created a superior flushing performance that delivers a cleaner clean.



Innovative Flow Splitter for extra coverage



Sculpted Flow Contours for superior washdown



Flow Balancer that controls and directs the flush



Flush flow matched in performance to our optimum sump design



URBANE II
CLEANFLUSH® WALL FACED CLOSE COUPLED TOILET SUITE WITH GERMGARD®

Bottom Inlet: 746250W
Back Entry: 746350W





URBANE II
CLEANFLUSH® INVISI SERIES II® WALL FACED SUITE WITH GERMGARD®

746280W





URBANE II
CLEANFLUSH® COMPACT INVISI SERIES II® WALL FACED TOILET SUITE

741500W

741520W

Toilet Suites / Bidettes



URBANE II BIDET CLEANFLUSH®
WALL FACED CLOSE COUPLED TOILET SUITE WITH GERMGARD®

Bottom Inlet: 848710W
Back Entry: 848711W



URBANE II BIDET CLEANFLUSH®
INVISI SERIES II® WALL FACED TOILET SUITE WITH GERMGARD®

848610W

*Bottom Inlet – for installation flexibility
*Back Entry – for a concealed connection



Accessories

Complete your bathroom with our range of Urbane II bathroom accessories. The contemporary design and thin-edge details will complement the rest of your choices from the collection. Metal construction ensures durability while dual fixings provide added strength.





CHROME | MATTE BLACK | BRUSHED BRASS | BRUSHED NICKEL | GUNMETAL





COMPLEMENTARY DESIGN



URBANE II 825MM DOUBLE TOWEL RAIL

Chrome
99616C

Matte Black
99616B

Brushed Brass
99616BB

Brushed Nickel
99616BN

Gunmetal
99616GM



URBANE II 825MM SINGLE TOWEL RAIL

Chrome
99617C

Matte Black
99617B

Brushed Brass
99617BB

Brushed Nickel
99617BN

Gunmetal
99617GM



URBANE II 625MM DOUBLE TOWEL RAIL

Chrome
99626C

Matte Black
99626B

Brushed Brass
99626BB

Brushed Nickel
99626BN

Gunmetal
99626GM



URBANE II 625MM SINGLE TOWEL RAIL

Chrome
99625C

Matte Black
99625B

Brushed Brass
99625BB

Brushed Nickel
99625BN

Gunmetal
99625GM





URBANE II HAND TOWEL RAIL

Chrome
99618C

Matte Black
99618B

Brushed Brass
99618BB

Brushed Nickel
99618BN

Gunmetal
99618GM

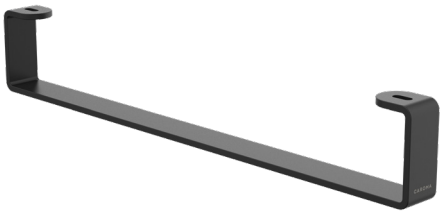

URBANE II HAND WALL BASIN INTEGRATED RAIL

Chrome
99623C

Matte Black
99623B

Brushed Brass
99623BB

Brushed Nickel
99623BN

Gunmetal
99623GM

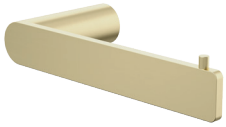

URBANE II TOILET ROLL HOLDER

Chrome
99620C

Matte Black
99620B

Brushed Brass
99620BB

Brushed Nickel
99620BN

Gunmetal
99620GM



URBANE II ROBE HOOK

Chrome
99621C

Matte Black
99621B

Brushed Brass
99621BB

Brushed Nickel
99621BN

Gunmetal
99621GM



URBANE II BATHROOM SHELF

Chrome
99619C

Matte Black
99619B

Brushed Brass
99619BB

Brushed Nickel
99619BN

Gunmetal
99619GM



CAROMA 40MM BOTTLE TRAP

White
687294W

Chrome
687295C

Matte Black
687294B

Brushed Brass
687294BB

Brushed Nickel
687294BN

Gunmetal
687294GM



URBANE II POP-UP PLUG AND WASTE

Chrome
323060C

Matte Black
323060B

Brushed Brass
323060BB

Brushed Nickel
323060BN

Gunmetal
323060GM



URBANE II BASIN DOME POP-UP PLUG AND WASTE

White (Metal)
687330AW

White (Ceramic)
687330SW

Chrome (Metal)
687330C

Matte Black (Metal)
687330B

Brushed Brass (Metal)
687330BB

Brushed Nickel (Metal)
687330BN

Gunmetal (Metal)
687330GM

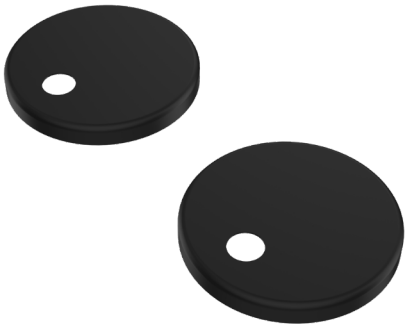

URBANE II TOILET SEAT HINGE CAPS

Matte Black
254213B

Brushed Brass
254213BB

Gunmetal
254213GM

Stainless Steel
254213SS



URBANE II WALL FACED CLOSE COUPLED FLUSH BUTTON

Chrome
687071C

Matte Black
687071B

Brushed Brass
687071BB

Brushed Nickel
687071BN

Gunmetal
687071GM



INVISI SERIES II® ROUND DUAL FLUSH PLATE AND BUTTONS

Chrome
237088C

Matte Black
237088B

Brushed Brass
237088BB

Brushed Nickel
237088BN

Gunmetal
237088GM





Kitchen

Embracing a distinctly modern Australian style, the Caroma Urbane Colour Kitchen Collection is a combination of functional and design unity. Environmentally friendly, durable and hard wearing our premium PVD finish will keep your kitchen looking stunning for years to come.





KITCHEN TAPWARE



PVD WARRANTY



LEAK TESTED



SPRING-LOADED RETRACTION



ROTATION LOCK

KITCHEN SINK



PVD FINISH



STEEL 304 GRADE

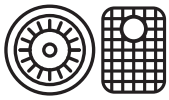

BONUS SINK ACCESSORIES

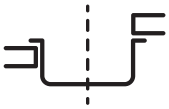

FLEXIBLE SINK INSTALLATION



BRUSHED BRASS GUNMETAL



URBANE II KITCHEN SINK MIXER

Chrome
99671C56A

Chrome (Lead Free)
99671C56AF

Matte Black
99671B56A

Matte Black (Lead Free)
99671B56AF

Brushed Brass
99671BB56A

Brushed Brass (Lead Free)
99671BB56AF

Brushed Nickel
99671BN56A

Brushed Nickel (Lead Free)
99671BN56AF

Gunmetal
99671GM56A

Gunmetal (Lead Free)
99671GM56AF



URBANE II PULL OUT KITCHEN SINK MIXER

Chrome
99672C56A

Chrome (Lead Free)
99672C56AF

Matte Black
99672B56A

Matte Black (Lead Free)
99672B56AF

Brushed Brass
99672BB56A

Brushed Brass (Lead Free)
99672BB56AF

Brushed Nickel
99672BN56A

Brushed Nickel (Lead Free)
99672BN56AF

Gunmetal
99672GM56A

Gunmetal (Lead Free)
99672GM56AF



URBANE II SINGLE BOWL SINK

Brushed Brass
CO0100BB

Gunmetal
CO0100GM



URBANE II DOUBLE BOWL SINK

Brushed Brass
CO0200BB

Gunmetal
CO0200GM

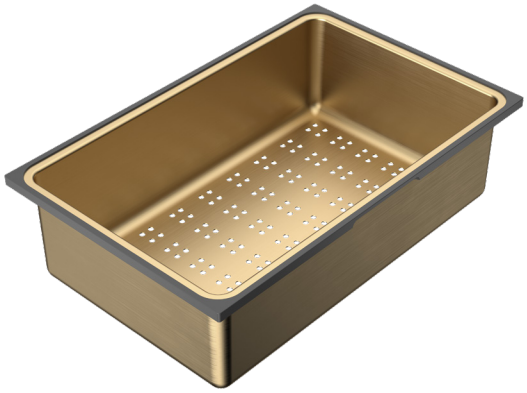

URBANE II STAINLESS STEEL COLANDER

Brushed Brass
COAC030BB

Gunmetal
COAC030GM

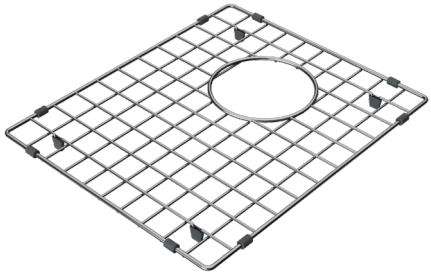

URBANE II SINK PROTECTOR

Brushed Brass
COAC070BB

Gunmetal
COAC070GM



URBANE II BASKET WASTE

Brushed Brass
A0084BB

Gunmetal
A0084GM

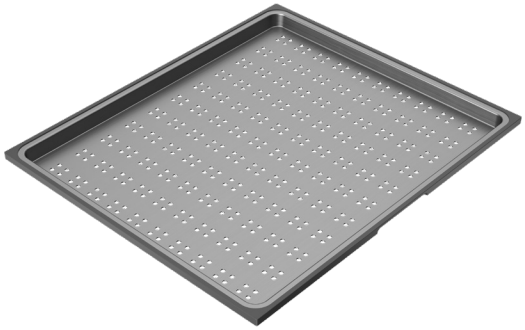

URBANE II STAINLESS STEEL DRAINER TRAY

Brushed Brass
COAC040BB

Gunmetal
COAC040GM

Product Specifications

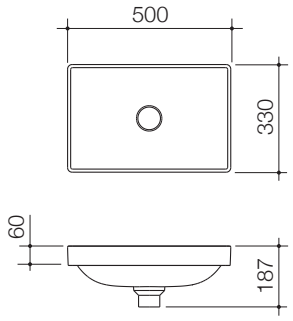

URBANE II
INSET BASIN

No tap landing
878200W

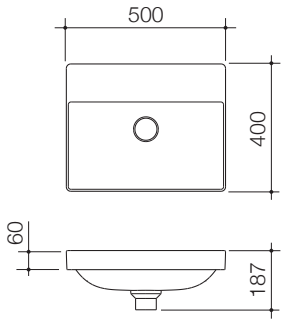

URBANE II
INSET BASIN

No taphole
878300W

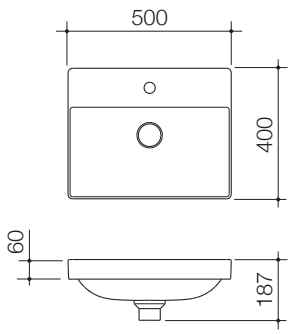

URBANE II
INSET BASIN

1 taphole
878310W

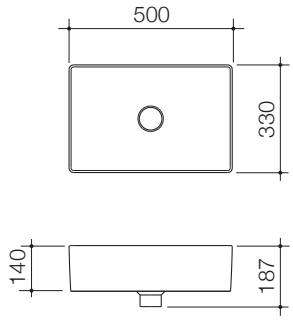

URBANE II
ABOVE COUNTER BASIN

No taphole
878400W

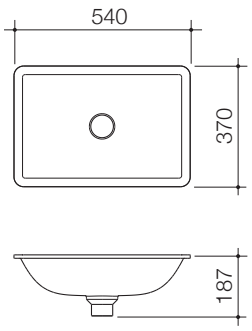

URBANE II
UNDER COUNTER BASIN

No taphole
878500W

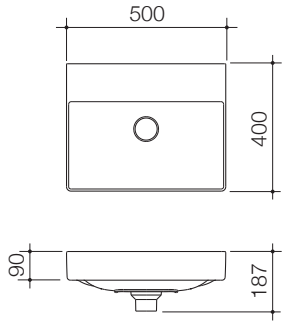

URBANE II
WALL BASIN

No taphole
878600W

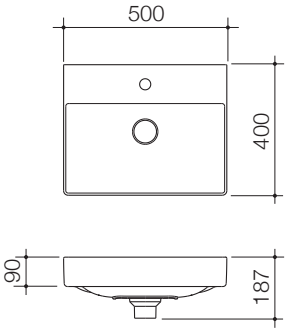

URBANE II
WALL BASIN

1 taphole
878610W

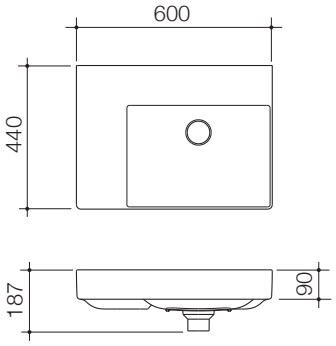

URBANE II
LEFT HAND SHELF WALL BASIN

No taphole
878800W

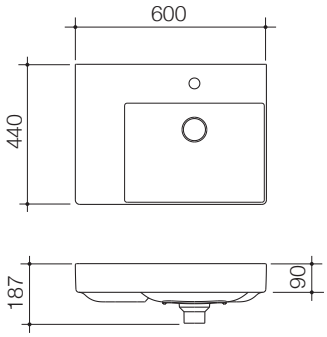

URBANE II
LEFT HAND SHELF WALL BASIN

1 taphole
878810W

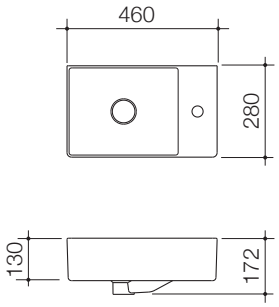

URBANE II
HAND WALL BASIN

1 taphole
879010W

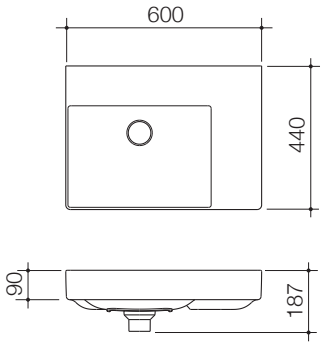

URBANE II
RIGHT HAND SHELF WALL BASIN

No taphole
878700W

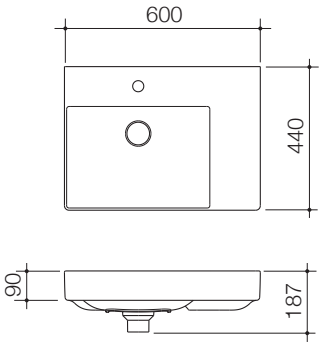

URBANE II
RIGHT HAND SHELF WALL BASIN

1 taphole
878710W

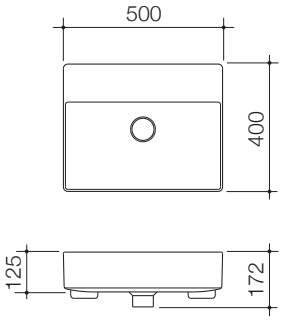

URBANE II
SEMI RECESSED BASIN

No taphole
878900W

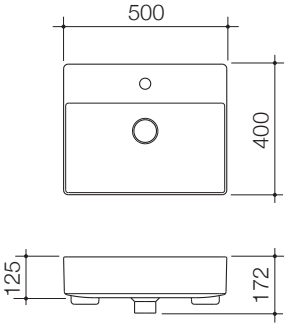

URBANE II
SEMI RECESSED BASIN

1 taphole
878910W

Product Specifications

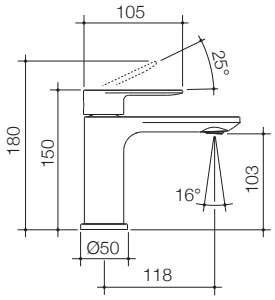

URBANE II BASIN MIXER

Chrome (Lead Free)
98608C6AF

Matte Black (Lead Free)
8608B6AF

Brushed Brass (Lead Free)
98608BB6AF

Brushed Nickel (Lead Free)
98608BN6AF

Gunmetal (Lead Free)
98608GM6AF

WELS 6 star rated, 4.5L/min

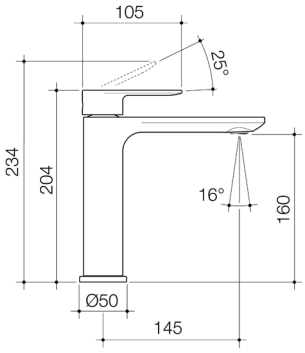

URBANE II MID TOWER BASIN MIXER

Chrome (Lead Free)
98620C6AF

Matte Black (Lead Free)
98620B6AF

Brushed Brass (Lead Free)
98620BB6AF

Brushed Nickel (Lead Free)
98620BN6AF

Gunmetal (Lead Free)
98620GM6AF

WELS 6 star rated, 4.5L/min

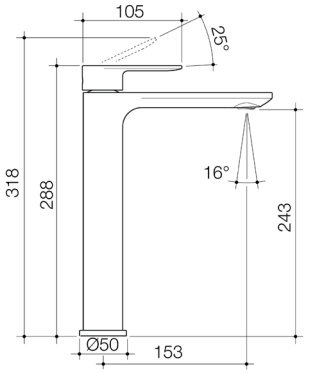

URBANE II TOWER BASIN MIXER

Chrome (Lead Free)
98609C6AF

Matte Black (Lead Free)
98609B6AF

Brushed Brass (Lead Free)
98609BB6AF

Brushed Nickel (Lead Free)
98609BN6AF

Gunmetal (Lead Free)
98609GM6AF

WELS 6 star rated, 4.5L/min

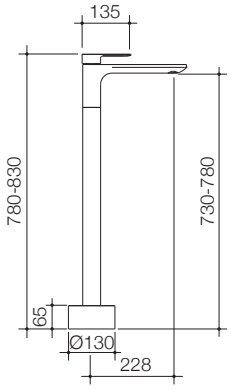

URBANE II FREESTANDING BATH FILLER

Chrome
98611C

Matte Black
98611B

Brushed Brass
98611BB

Brushed Nickel
98611BN

Gunmetal
98611GM

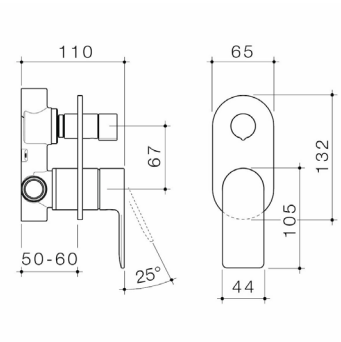

URBANE II BATH/SHOWER MIXER WITH DIVERTER - ROUND COVER PLATE

Chrome
99656C

Matte Black
99656B

Brushed Brass
99656BB

Brushed Nickel
99656BN

Gunmetal
99656GM

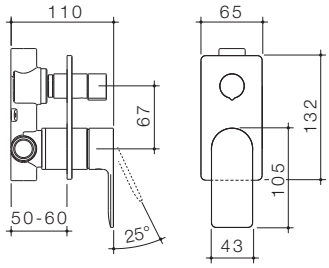

URBANE II BATH/SHOWER MIXER WITH DIVERTER - RECTANGULAR COVER PLATE

Chrome
99657C

Matte Black
99657B

Brushed Brass
99657BB

Brushed Nickel
99657BN

Gunmetal
99657GM

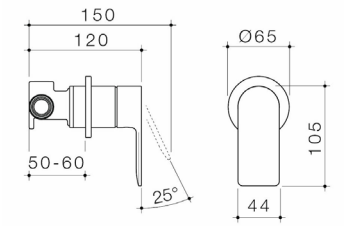

URBANE II BATH/SHOWER MIXER - ROUND COVER PLATE

Chrome
99648C

Matte Black
99648B

Brushed Brass
99648BB

Brushed Nickel
99648BN

Gunmetal
99648GM

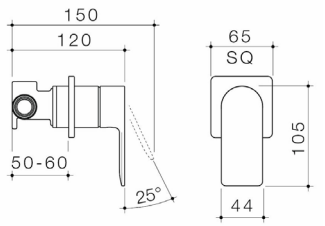

URBANE II BATH/SHOWER MIXER - SQUARE COVER PLATE

Chrome
99649C

Matte Black
99649B

Brushed Brass
99649BB

Brushed Nickel
99649BN

Gunmetal
99649GM

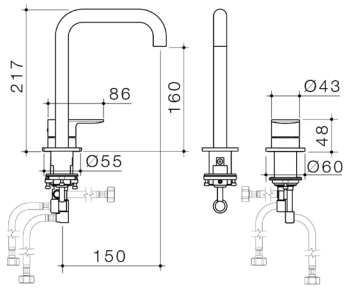

URBANE II HOB BASIN MIXER SET 150MM

Chrome
99688C65A

Matte Black
99688B65A

Brushed Brass
99688BB65A

Brushed Nickel
99688BN65A

Gunmetal
99688GM65A

WELS 6 star rated, 4.5L/min, includes optional
WELS 5 star rated, 6.0L/min

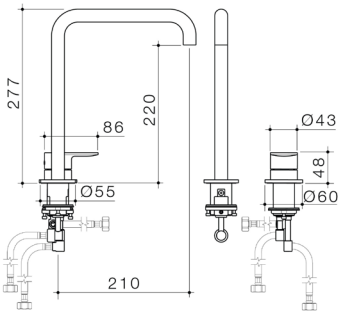

URBANE II HOB BASIN/ SINK MIXER SET 210MM

Chrome
99689C65A

Matte Black
99689B65A

Brushed Brass
99689BB65A

Brushed Nickel
99689BN65A

Gunmetal
99689GM65A

WELS 6 star rated, 4.5L/min, includes optional
WELS 5 star rated, 6.0L/min

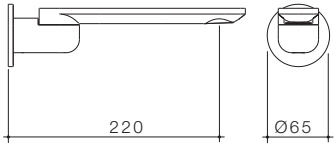

URBANE II 220MM BATH SWIVEL OUTLET - ROUND COVER PLATE

Chrome
99669C

Matte Black
99669B

Brushed Brass
99669BB

Brushed Nickel
99669BN

Gunmetal
99669GM

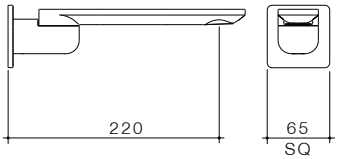

URBANE II 220MM BATH SWIVEL OUTLET - SQUARE COVER PLATE

Chrome
99670C

Matte Black
99670B

Brushed Brass
99670BB

Brushed Nickel
99670BN

Gunmetal
99670GM

Product Specifications

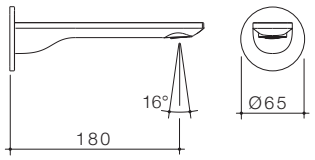

URBANE II 180MM BASIN/BATH OUTLET - ROUND COVER PLATE

Chrome (Lead Free)
99665C6AF

Matte Black (Lead Free)
99665B6AF

Brushed Brass (Lead Free)
99665BB6AF

Brushed Nickel (Lead Free)
99665BN6AF

Gunmetal (Lead Free)
99665GM6AF

WELS 6 star rated, 4.5L/min

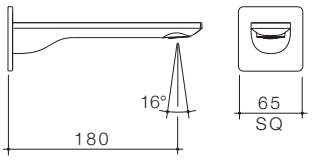

URBANE II 180MM BASIN/BATH OUTLET - SQUARE COVER PLATE

Chrome (Lead Free)
99666C6AF

Matte Black (Lead Free)
99666B6AF

Brushed Brass (Lead Free)
99666BB6AF

Brushed Nickel (Lead Free)
99666BN6AF

Gunmetal (Lead Free)
99666GM6AF

WELS 6 star rated, 4.5L/min

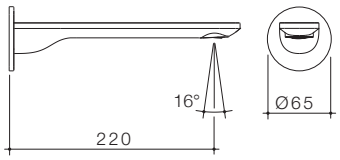

URBANE II 220MM BASIN/BATH OUTLET - ROUND COVER PLATE

Chrome (Lead Free)
99667C6AF

Matte Black (Lead Free)
99667B6AF

Brushed Brass (Lead Free)
99667BB6AF

Brushed Nickel (Lead Free)
99667BN6AF

Gunmetal (Lead Free)
99667GM6AF

WELS 6 star rated, 4.5L/min

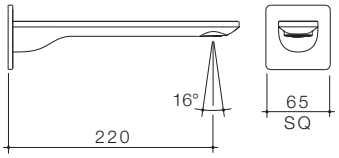

URBANE II 220MM BASIN/BATH OUTLET - SQUARE COVER PLATE

Chrome (Lead Free)
99668C6AF

Matte Black (Lead Free)
99668B6AF

Brushed Brass (Lead Free)
99668BB6AF

Brushed Nickel (Lead Free)
99668BN6AF

Gunmetal (Lead Free)
99631GM6AF

WELS 6 star rated, 4.5L/min

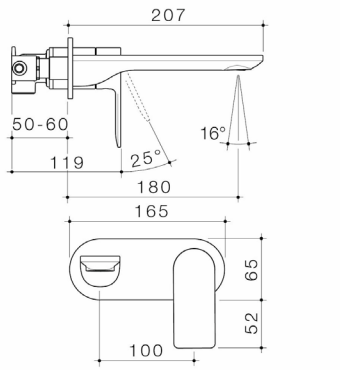

URBANE II 180MM WALL BASIN/BATH MIXER - ROUND COVER PLATE

Chrome (Lead Free)
99631C6AF

Matte Black (Lead Free)
99631B6AF

Brushed Brass (Lead Free)
99631BB6AF

Brushed Nickel (Lead Free)
99631BN6AF

Gunmetal (Lead Free)
99631GM6AF

WELS 6 star rated, 4.5L/min

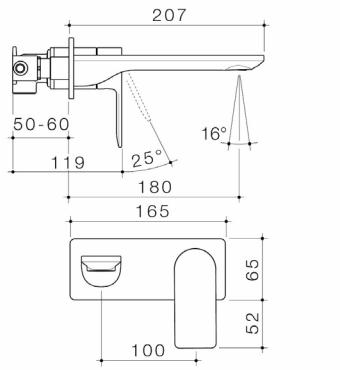

URBANE II 180MM WALL BASIN/BATH MIXER - RECTANGULAR COVER PLATE

Chrome (Lead Free)
99632C6AF

Matte Black (Lead Free)
99632B6AF

Brushed Brass (Lead Free)
99632BB6AF

Brushed Nickel (Lead Free)
99632BN6AF

Gunmetal (Lead Free)
99632GM6AF

WELS 6 star rated, 4.5L/min

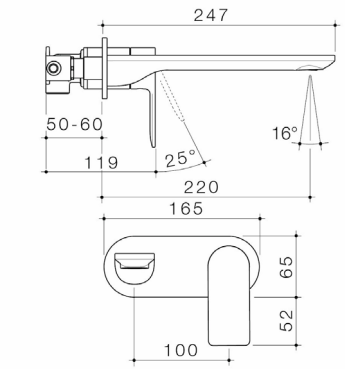

URBANE II 220MM WALL BASIN/BATH MIXER - ROUND COVER PLATE

Chrome (Lead Free)
99641C6AF

Matte Black (Lead Free)
99641B6AF

Brushed Brass (Lead Free)
99641BB6AF

Brushed Nickel (Lead Free)
99641BN6AF

Gunmetal (Lead Free)
99641GM6AF

WELS 6 star rated, 4.5L/min

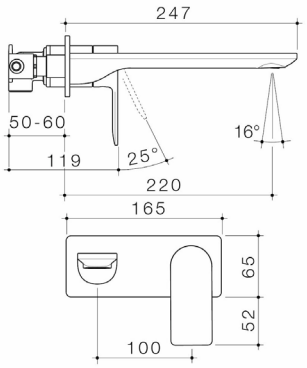

URBANE II 220MM WALL BASIN/BATH MIXER - RECTANGULAR COVER PLATE

Chrome (Lead Free)
99642C6AF

Matte Black (Lead Free)
99642B6AF

Brushed Brass (Lead Free)
99642BB6AF

Brushed Nickel (Lead Free)
99642BN6AF

Gunmetal (Lead Free)
99642GM6AF

WELS 6 star rated, 4.5L/min

Product Specifications

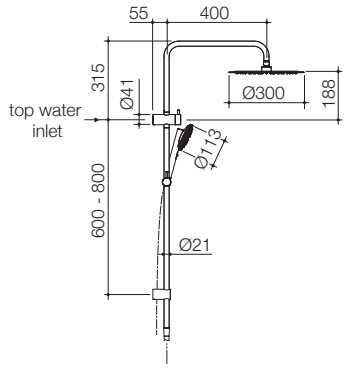

URBANE II
RAIL SHOWER WITH 300MM OVERHEAD

Chrome
99630C3A

Matte Black
99630B3A

Brushed Brass
99630BB3A

Brushed Nickel
99630BN3A

Gunmetal
99630GM3A

WELS 3 star rated, 9.0L/min

WELS 4 star rated, 7.5L/min

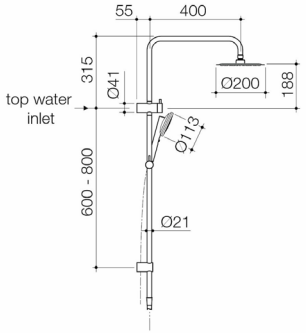

URBANE II
RAIL SHOWER WITH 200MM OVERHEAD

Chrome
99660C4E

Matte Black
99660B4E

Brushed Brass
99660BB4E

Brushed Nickel
99660BN4E

Gunmetal
99660GM4E

WELS Overhead
4 star rated, 6.5L/min

WELS Hand
4 star rated, 6.5L/min

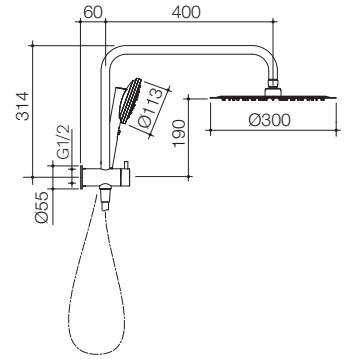

URBANE II
COMPACT TWIN SHOWER

Chrome
99632C3A

Matte Black
99632B3A

Brushed Brass
99632BB3A

Brushed Nickel
99632BN3A

Gunmetal
99632GM3A

WELS Overhead
3 star rated, 9.0L/min

WELS Hand
4 star rated, 7.5L/min

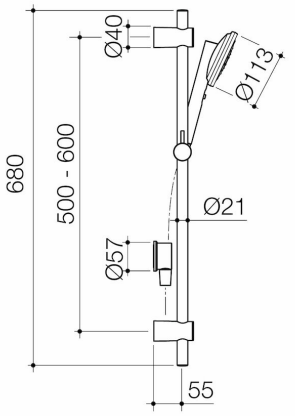

URBANE II
RAIL SHOWER

Chrome
99631C4E

Matte Black
99631B4E

Brushed Brass
99631BB4E

Brushed Nickel
99631BN4E

Gunmetal
99631GM4E

WELS Overhead
4 star rated, 7.5L/min

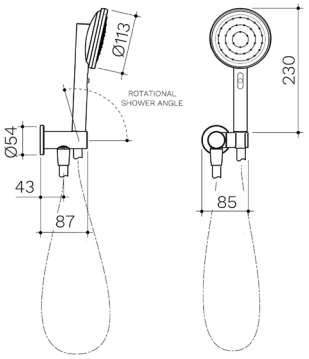

URBANE II
HAND SHOWER

Chrome
99633C4E

Matte Black
99633B4E

Brushed Brass
99633BB4E

Brushed Nickel
99633BN4E

Gunmetal
99633GM4E

WELS Overhead
4 star rated, 7.5L/min

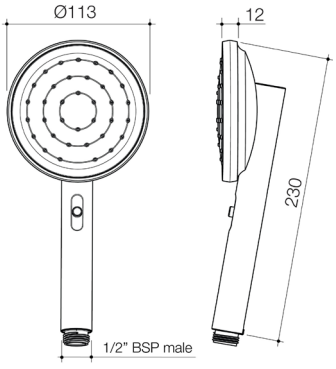

URBANE II HAND SHOWER (HANDSET ONLY)

Chrome
99643C4E

Matte Black
99643B4E

Brushed Brass
99643BB4E

Brushed Nickel
99643BN4E

Gunmetal
99643GM4E

WELS Overhead
4 star rated, 7.5L/min

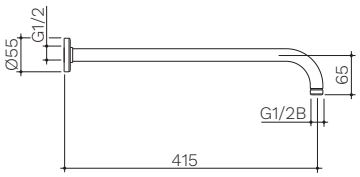

URBANE II 415MM RIGHT ANGLED SHOWER ARM

Chrome 99641C	Brushed Nickel 99641BN
Matte Black 99641B	Gunmetal 99641GM
Brushed Brass 99641BB	

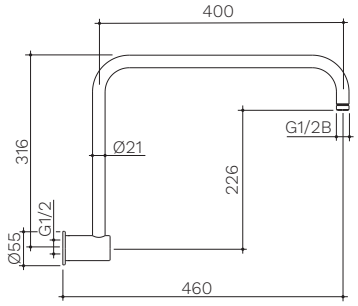

URBANE II 460MM UPSWEPT SHOWER ARM

Chrome 99642C	Brushed Nickel 99642BN
Matte Black 99642B	Gunmetal 99642GM
Brushed Brass 99642BB	

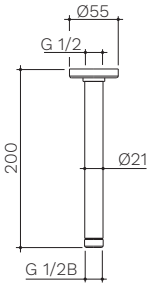

URBANE II 200MM CEILING SHOWER ARM

Chrome 99658C	Brushed Nickel 99658BN
Matte Black 99658B	Gunmetal 99658GM
Brushed Brass 99658BB	

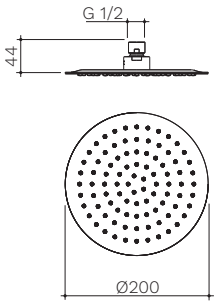

URBANE II 200MM ROUND RAIN SHOWER (4 STAR)

Chrome 99663C4E	Brushed Nickel 99663BN4E
Matte Black 99663B4E	Gunmetal 99663GM4E
Brushed Brass 99663BB4E	WELS Overhead 4 star rated, 7.5L/min

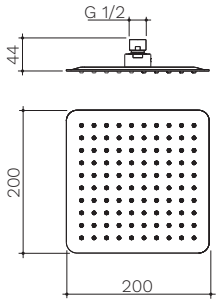

URBANE II 200MM SQUARE RAIN SHOWER (4 STAR)

Chrome 99664C4E	Brushed Nickel 99664BN4E
Matte Black 99664B4E	Gunmetal 99664GM4E
Brushed Brass 99664BB4E	WELS Overhead 4 star rated, 7.5L/min

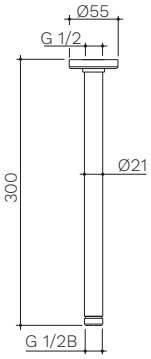

URBANE II 300MM CEILING SHOWER ARM

Chrome 99639C	Brushed Nickel 99639BN
Matte Black 99639B	Gunmetal 99639GM
Brushed Brass 99639BB	

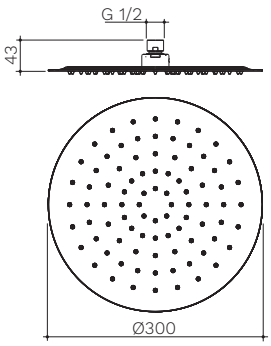

URBANE II 300MM ROUND RAIN SHOWER

Chrome 99634C3A	Brushed Nickel 99634BN3A
Matte Black 99634B3A	Gunmetal 99634GM3A
Brushed Brass 99634BB3A	WELS Overhead 3 (Range D) star rated, 9.5L/min

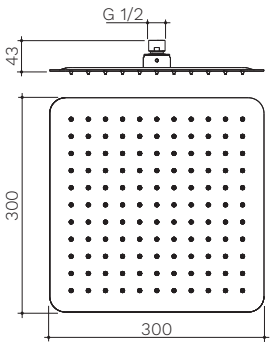

URBANE II 300MM SQUARE RAIN SHOWER

Chrome 99655C3A	Brushed Nickel 99655BN3A
Matte Black 99655B3A	Gunmetal 99655GM3A
Brushed Brass 99655BB3A	WELS Overhead 3 (Range D) star rated, 9.5L/min

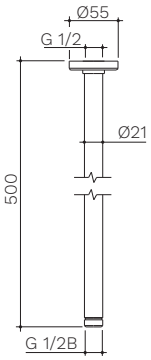

URBANE II 500MM CEILING SHOWER ARM

Chrome 99640C	Brushed Nickel 99640BN
Matte Black 99640B	Gunmetal 99640GM
Brushed Brass 99640BB	

Product Specifications

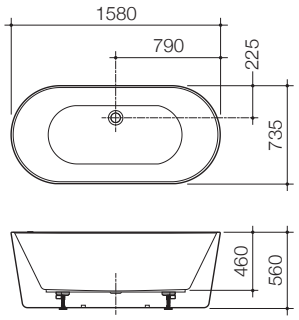

URBANE II
1600 FREESTANDING BATH

AU6W

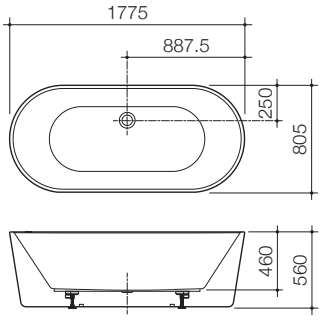

URBANE II
1800 FREESTANDING BATH

AU8W

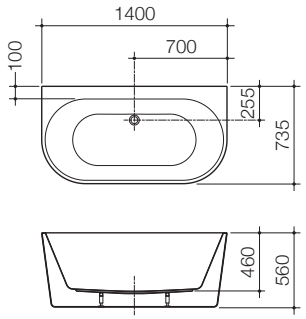

URBANE II
1400 FREESTANDING
BACK TO WALL BATH

AU4WFW

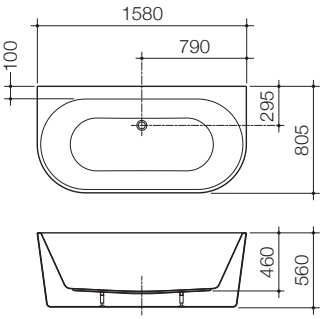

URBANE II
1600 BACK TO WALL
FREESTANDING BATH

AU6WFW

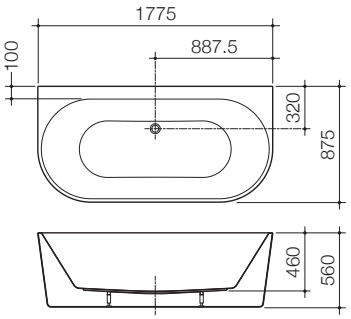

URBANE II
1800 BACK TO WALL
FREESTANDING BATH

AU8WFW

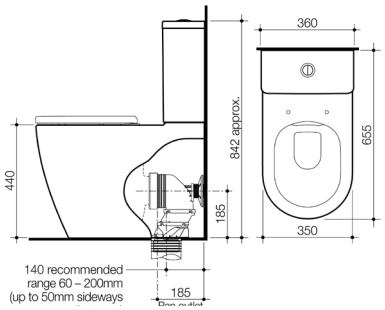

URBANE II CLEANFLUSH® WALL FACED CLOSE COUPLED TOILET SUITE WITH GERMGARD®

Suits Bottom Inlet Cistern
746250W

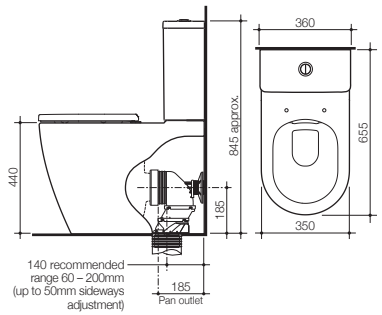

URBANE II CLEANFLUSH® WALL FACED CLOSE COUPLED TOILET SUITE WITH GERMGARD®

Suits Back Entry Cistern
746350W

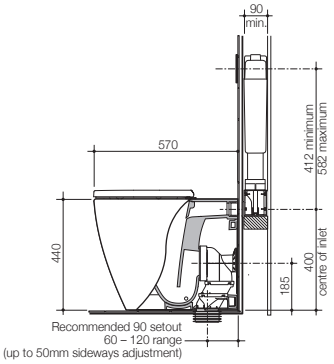

URBANE II CLEANFLUSH® INVISI SERIES II® WALL FACED SUITE WITH GERMGARD®

746280W

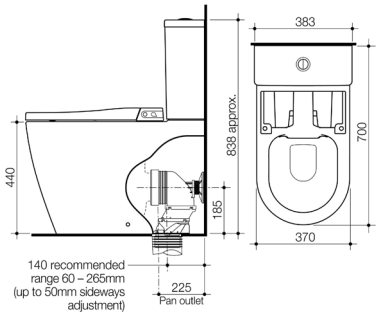

URBANE II BIDET CLEANFLUSH® WALL FACED CLOSE COUPLED BOTTOM INLET TOILET SUITE (WITH GERMGARD®)

848710W

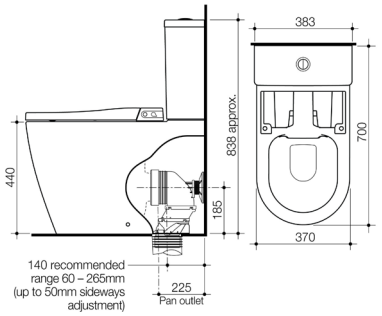

URBANE II BIDET CLEANFLUSH® WALL FACED CLOSE COUPLED BACK ENTRY TOILET SUITE (WITH GERMGARD®)

848711W

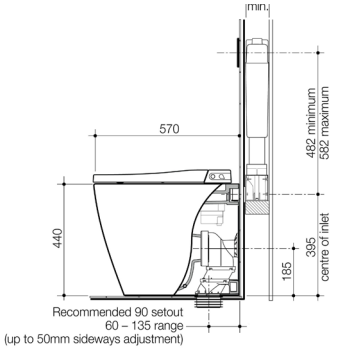

URBANE II BIDET CLEANFLUSH® INVISI SERIES II® WALL FACED TOILET SUITE (WITH GERMGARD®)

848610W

Product Specifications

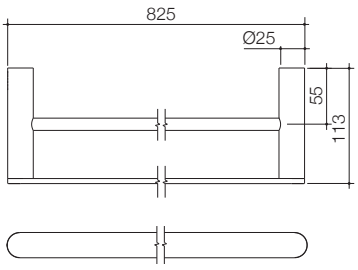

URBANE II 825MM DOUBLE TOWEL RAIL

Chrome 99616C	Brushed Nickel 99616BN
Matte Black 99616B	Gunmetal 99616GM
Brushed Brass 99616BB	

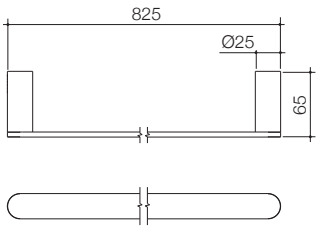

URBANE II 825MM SINGLE TOWEL RAIL

Chrome 99617C	Brushed Nickel 99617BN
Matte Black 99617B	Gunmetal 99617GM
Brushed Brass 99617BB	

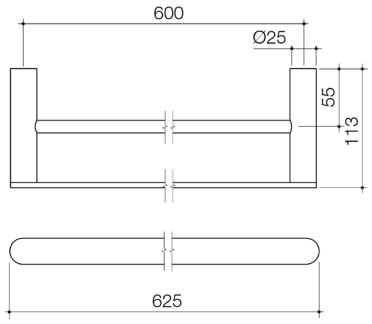

URBANE II 625MM DOUBLE TOWEL RAIL

Chrome 99626C	Brushed Nickel 99626BN
Matte Black 99626B	Gunmetal 99626GM
Brushed Brass 99626BB	

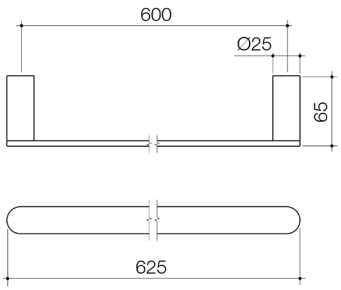

URBANE II 625MM SINGLE TOWEL RAIL

Chrome 99625C	Brushed Nickel 99625BN
Matte Black 99625B	Gunmetal 99625GM
Brushed Brass 99625BB	

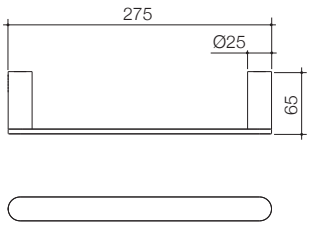

URBANE II HAND TOWEL RAIL

Chrome 99618C	Brushed Nickel 99618BN
Matte Black 99618B	Gunmetal 99618GM
Brushed Brass 99618BB	

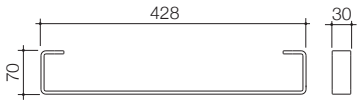

URBANE II HAND WALL BASIN INTEGRATED RAIL

Chrome 99623C	Brushed Nickel 99623BN
Matte Black 99623B	Gunmetal 99623GM
Brushed Brass 99623BB	

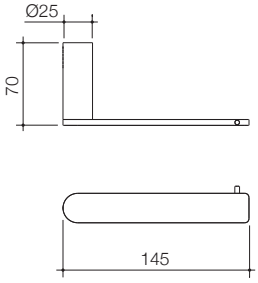

URBANE II TOILET ROLL HOLDER

Chrome 99620C	Brushed Nickel 99620BN
Matte Black 99620B	Gunmetal 99620GM
Brushed Brass 99620BB	

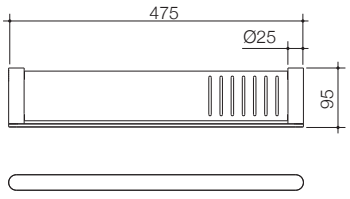

URBANE II BATHROOM SHELF

Chrome 99619C	Brushed Nickel 99619BN
Matte Black 99619B	Gunmetal 99619GM
Brushed Brass 99619BB	

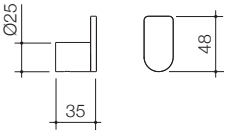

URBANE II ROBE HOOK

Chrome 99621C	Brushed Nickel 99621BN
Matte Black 99621B	Gunmetal 99621GM
Brushed Brass 99621BB	

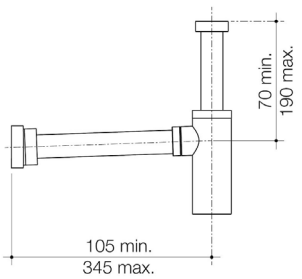

40MM BOTTLE TRAP

White
687294W

Brushed Brass
687294BB

Chrome
687295C

Brushed Nickel
687294BN

Matte Black
687294B

Gunmetal
687294GM

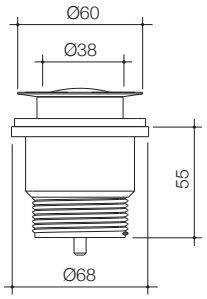

URBANE II POP-UP PLUG & WASTE

Chrome
323060C

Brushed Nickel
323060BN

Matte Black
323060B

Gunmetal
323060GM

Brushed Brass
323060BB

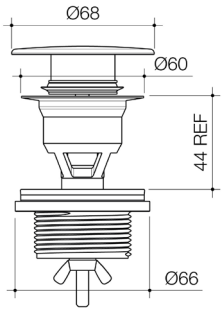

URBANE II BASIN DOME POP-UP PLUG & WASTE

White (Metal)
687330AW

Brushed Brass (Metal)
687330BB

White (Ceramic)
687330SW

Brushed Nickel (Metal)
687330BN

Chrome (Metal)
687330C

Gunmetal (Metal)
687330GM

Matte Black (Metal)
687330B

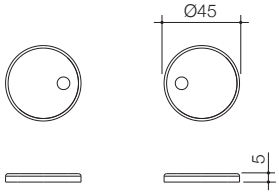

URBANE II TOILET SEAT HINGE CAPS

Matte Black
254213B

Gunmetal
254213GM

Brushed Brass
254213BB

Stainless Steel
254213SS

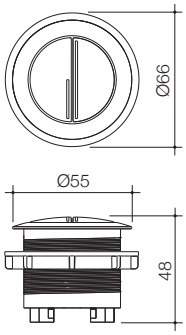

URBANE II WALL FACED CLOSE COUPLED FLUSH BUTTON

Chrome
687071C

Brushed Nickel
687071BN

Matte Black
687071B

Gunmetal
687071GM

Brushed Brass
687071BB

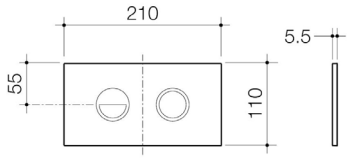

INVISI SERIES II® ROUND DUAL FLUSH PLATE & BUTTONS

Chrome
237088C

Brushed Nickel
237088BN

Matte Black
237088B

Gunmetal
237088GM

Brushed Brass
237088BB

Product Specifications

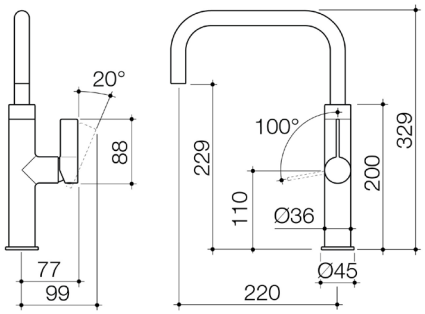

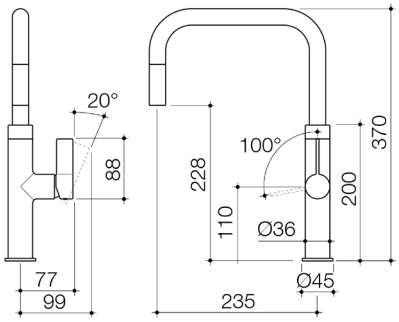

URBANE II KITCHEN SINK MIXER

Chrome
99671C56A

Chrome (Lead Free)
99671C56AF

Matte Black
99671B56A

Matte Black
(Lead Free)
99671B56AF

Brushed Brass
99671BB56A

Brushed Brass
(Lead Free)
99671BB56AF

Brushed Nickel
99671BN56A

Brushed Nickel
(Lead Free)
99671BN56AF

Gunmetal
99671GM56A

Gunmetal
(Lead Free)
99671GM56AF

URBANE II PULL-OUT KITCHEN SINK MIXER

Chrome
99672C56A

Chrome (Lead Free)
99672C56AF

Matte Black
99672B56A

Matte Black
(Lead Free)
99672B56AF

Brushed Brass
99672BB56A

Brushed Brass
(Lead Free)
99672BB56AF

Brushed Nickel
99672BN56A

Brushed Nickel
(Lead Free)
99672BN56AF

Gunmetal
99672GM56A

Gunmetal
(Lead Free)
99672GM56AF

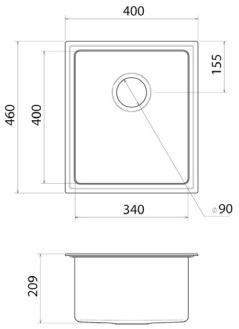

URBANE II SINGLE BOWL SINK

Brushed Brass
CO0100BB

Gunmetal
CO0100GM

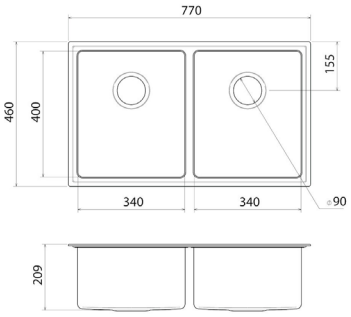

URBANE II DOUBLE BOWL SINK

Brushed Brass
CO0200BB

Gunmetal
CO0200GM

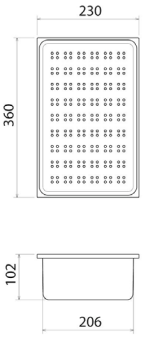

URBANE II STAINLESS STEEL COLANDER

Brushed Brass
COAC030BB

Gunmetal
COAC030GM

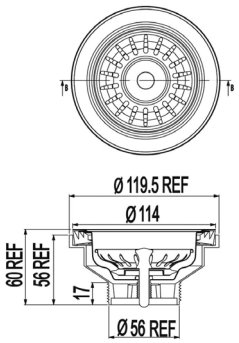

URBANE II BASKET WASTE

Brushed Brass
A0084BB

Gunmetal
A0084GM

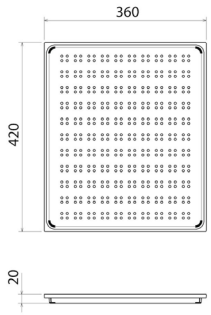

URBANE II STAINLESS STEEL DRAINER TRAY

Brushed Brass
COAC040BB

Gunmetal
COAC040GM

Notes

CAROMA INDUSTRIES LIMITED
A subsidiary of GWA Group Ltd

Australia

Level 24, 100 Mount Street
North Sydney NSW

13 14 16
Caroma.com.au

New Zealand

41 Jomac Place Avondale,
Auckland 1026 Private Bag 19996

0800 804 222
Caroma.co.nz



EXPLORE AT
specify.caroma.com.au

SUPPORT
caroma.com.au
caroma.co.nz

CALL US
Call Caroma to speak to one of our Professionals

CAROMA

Made For Life