BJP18100-PRS - BALL JOINT PRESS ONLY

MATCO TOOLS

BJP18100-PRS

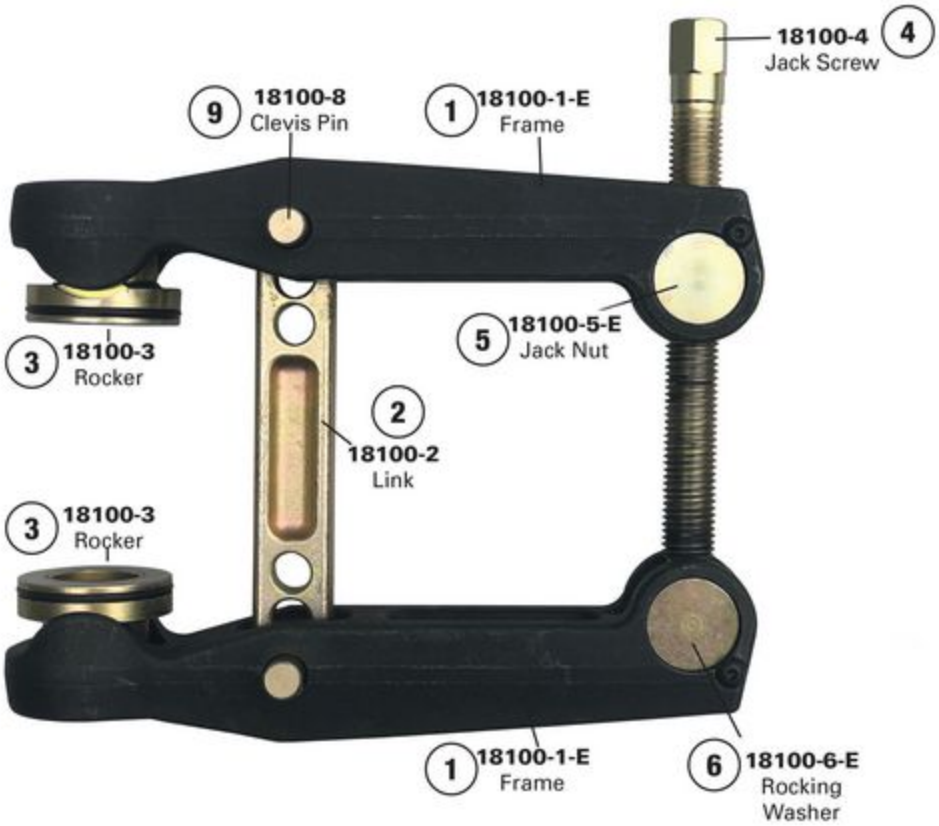

Item: BJP18100-PRS

Description: BALL JOINT PRESS ONLY

Notes: N/A

Figure No	Part Number	Description	No. Reqd	Warranty Code
1	*TG18100-1-E	FRAME, ENCLOSED	2	
2	*TG18100-2	LINK	1	
3	*TG18100-3	ROCKER	2	
4	*TG18100-4	JACK SCREW	1	
5	*TG18100-5-E	JACK NUT, ENCLOSED	1	
6	*TG18100-6-E	ROCKING WASHER, ENCLOSED	1	
9	*TG18100-8	CLEVIS PIN	2	