MSC5XGRN, POWER TOOL CART - GREEN
MSC5XPUR, POWER TOOL CART - PURPLE
MSC5XBLK, POWER TOOL CART - BLACK
MSC5XGRY, POWER TOOL CART - THUNDERSTORM GRAY

It is the responsibility of the owner to make sure all personnel read this manual prior to using the device. It is also the responsibility of the device owner to keep this manual intact and in a convenient location for all to see and read. If the manual or product labels are lost or not legible, contact Matco Tools for replacements. If the operator is not fluent in English, the product and safety instructions shall be read and discussed with the operator in the operator's native language by the purchaser/owner or his designee, making sure that the operator comprehends its contents. PLEASE NOTE: Loading cart beyond rated capacity may cause structural damage to the cart as well as personal and /or property damage. Please educate your customers to the dangers of overloading.

⚠ WARNING

- Read and follow all instructions in User's Manual.
- Do not load carts beyond rated capacity

Caster Capacity (Each).....396 lbs.
Top Till Capacity .....150 lbs.
Drawer Capacity.....100 lbs.
Power Drawer Capacity.....100 lbs.
Security Drawer Capacity.....50 lbs.
Total Capacity..... 900 lbs.

PLEASE NOTE: Loading cart beyond rated capacity may cause structural damage to the cart as well as personal and/or property damage. Please educate your customers to the "dangers of overloading". Do not attempt to push cart with items on the top lid. • Lock lid and drawers before moving. • Apply brake on locking casters anytime cart is in place. • Do not pull cart. Push from handle on end to move. • Units can tip or fall causing damage or personal injury. • Cart is designed to roll easily on flat surfaces and should not be used on uneven or inclined surfaces. • Do not open more than one loaded drawer at a time. • Do not stand on or step in drawers. • Keep children away from unit. • Wear gloves when lifting edges. • Before connecting to a power supply, always check to make sure the power supply corresponds to the voltage required on the product. • Fully insert plug to reduce the risk of electric shock. • Always unplug when not in use. • Disconnect power before installing or servicing. • Do not try to plug in unit or product when hands are wet or damp, or if standing on a wet or damp surface or in water. • Never attempt to pick up unit or plugged in product that should fall in standing water. •This unit is not waterproof and is intended for general use indoors. • Do not use in potentially dangerous locations, such as flammable or explosive atmospheres. • Keep cord away from heat, oil, sharp edges or moving parts. • Failure to heed these warnings may result in personal injury and/or property damage.

WARNING: This product can expose you to chemicals including lead, which is known to the State of California to cause cancer and birth defects or other reproductive harm. For more information go to www.P65Warnings.ca.gov.

Copyright © 2025
All rights reserved.

SPECIFICATIONS

TOTAL DIMENSIONS

Total Storage Volume	31079.7 cu. in.
Product Weight	430 lbs.
Total Storage Area (Square Inches)	5477.4 sq. in.
Cart Volume	32.5 cu. ft.
Storage Volume	17.99 cu. ft.
Height (Floor to Lid)	46.75 in.
Depth (Drawer Face to Back of Cart)	24 in.
Width (Not including push handle)	50 in.

WEIGHT RATINGS

Max Total Capacity	900 lbs.
Top Till Compartment	150 lbs.
Power Drawer	100 lbs.
3" Drawer	100 lbs.
4" Drawer	100 lbs.
5" Drawer	100 lbs.
6" Drawer	100 lbs.

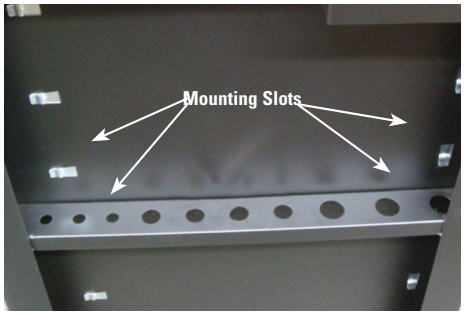

TROUBLESHOOTING

Problem: Drawers appear not to fit, do not slide in accurately and bump the cart sides.

Solution: The roller bearing slides must be fully engaged into the mounting slots on all drawers. They potentially could fall out of position during shipment. Check the side of the cart to determine which slide is out of position.

Remove the drawer that is out of position. The drawer is removed by the two clips on the actual roller bearing slide.

Simply push the roller bearing slide back down into position.

Insert the drawer back onto the roller bearing slides.

Problem: Back Lock/Unlock Switch does not engage the drawer.

Solution: The inside Lock/Unlock slide potentially could fall out of its groove during shipment. Unscrew the four screws that are holding the Lock/Unlock slide in place.

Once the screws are removed, simply place the latch back onto the slide and tighten the four screws back down.

WARRANTY

This MATCO TOOLS service/storage cart carries a one (1) year warranty (only for the parts listed below) subject to the terms and conditions below.

What is Covered

MATCO TOOLS warrants the following components of this product to be free from defects in workmanship and materials. The components covered by the one (1) year warranty include welded joints, paint, drawers, lid, hinge, slides, casters, handles and pulls, gas pistons, bumpers, key lock, drawer lock mechanism, hardware, clips, and grommets.

What is NOT Covered (Exclusions)

This warranty does not cover normal wear, damage caused by neglect and misuse. Disassembly of any product will void the warranty. This warranty also only applies to a genuine MATCO TOOLS branded product that was purchased from an authorized MATCO TOOLS dealer. Purchases outside of this are not covered. If the product has been modified in any way it will not be covered.

Drawer liners are not covered under warranty.

Themed, Special or Limited Edition Product - Any MATCO TOOLS storage/service cart that is a limited, special, or themed design will not be covered under the one (1) year warranty due to the special paint, decals, and screen-printing. Therefore, decals and screen-printing, and will only carry an OUT OF THE BOX warranty. However, other interchangeable components such as the drawers, lid, gas pistons, bumpers, casters, slides, hardware, key lock, drawer lock mechanism, clips and grommets will all retain the one (1) year warranty.

MSC5XGRN, POWER TOOL CART - GREEN
MSC5XPUR, POWER TOOL CART - PURPLE
MSC5XBLK, POWER TOOL CART - BLACK
MSC5XGRY, POWER TOOL CART - THUNDERSTORM GRAY

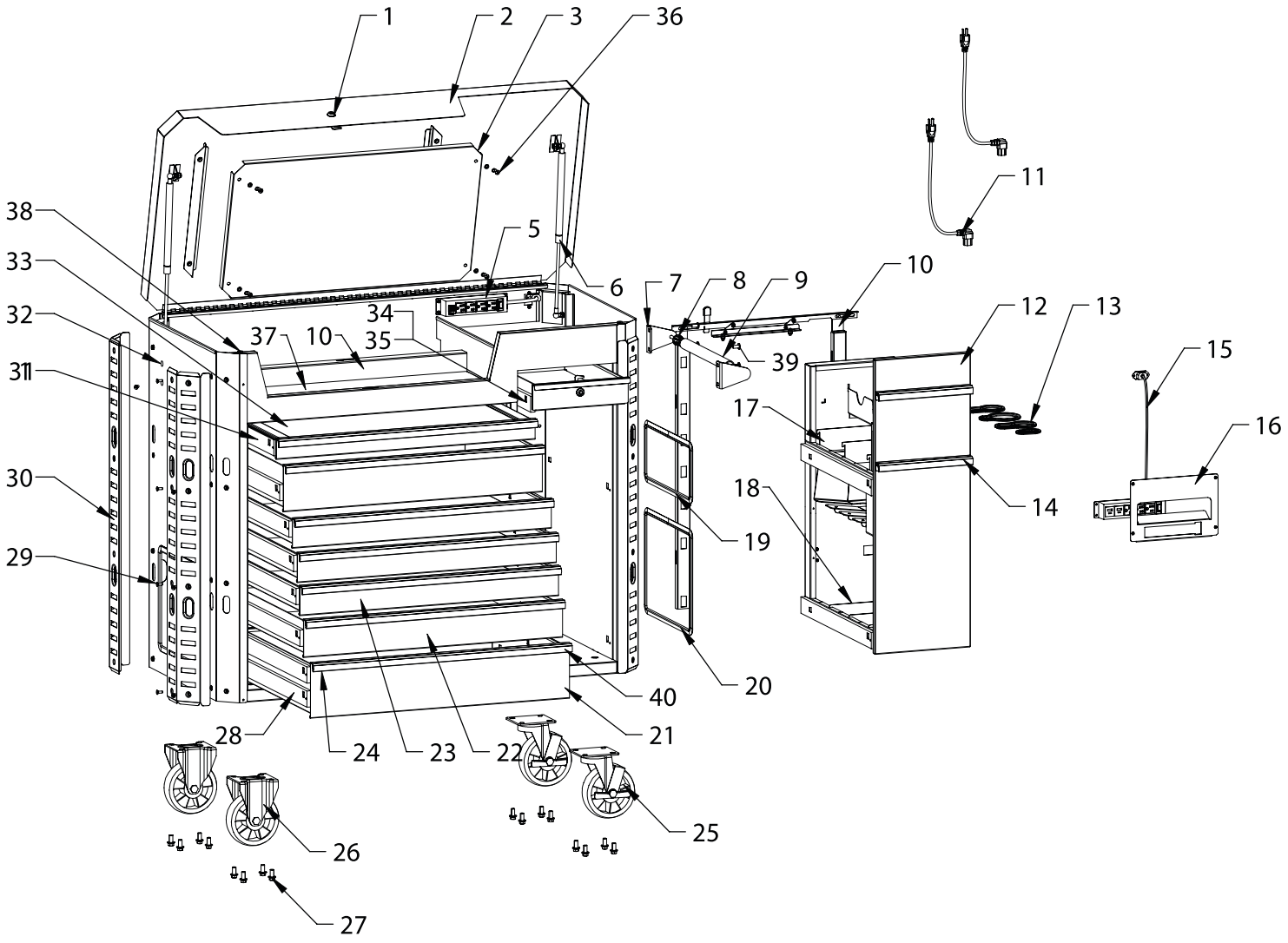

MSC5XGRN, POWER TOOL CART - GREEN
MSC5XPUR, POWER TOOL CART - PURPLE
MSC5XBLK, POWER TOOL CART - BLACK
MSC5XGRY, POWER TOOL CART - THUNDERSTORM GRAY

Item	Part No	Parts Name	Qty
1	RSLOCK2KBK01	LOCK w/2 KEYS (EACH)	2
2	RSLID10RGR	LID (INCL. 10 RIVETS) - GREEN	1
2	RSLID10RPP	LID (INCL 10 RIVETS) - PURPLE	1
2	RSLID10RGY01	LID (INCL. 10 RIVETS) - THUNDERSTORM GRAY	1
2	RSLID10RBK	LID (INCL. 10 RIVETS) - BLACK	1
3	RSTCBPNHGR	TOP COVER BACKPLATE - NO HOLES - GREEN	1
3	RSTCBPNHPP	TOP COVER BACKPLATE - NO HOLES - PURPLE	1
3	RSTCBPNHGY	TOP COVER BACKPLATE - NO HOLES - THUNDERSTORM GRAY	1
3	RSTCBPNHBK	TOP COVER BACKPLATE - NO HOLES - BLACK	1
5	RSPSTT	4 USB POWER STRIP - TOP TRAY	1
6	RSGP9	GAS SHOCK (EACH)	2
7	RSHDLBRKTBK04	PUSH HANDLE BRACKET (PAIR) (INCL. HARDWARE)	1
8	RSRT	ROUND TUBE (PAIR)	1
9	RSPUSHHDL11	PUSH HANDLE	1
10	RSLMGR	LOCKING MECHANISM - GREEN	1
10	RSLMPP	LOCKING MECHANISM - PURPLE	1
10	RSLIMGY02	LOCKING MECHANISM - THUNDERSTORM GRAY	1
10	RSLMBK01	LOCKING MECHANISM - BLACK	1
11	RSPOWCORD03	POWER CORD FOR POWER STRIP (EACH)	2
12	RSPDRWGR	POWERED DRAWER - GREEN	1
12	RSPDRWPP	POWERED DRAWER - PURPLE	1
12	RSPDRWGY01	POWERED DRAWER - THUNDERSTORM GRAY	1
12	RSPDRWBK03	POWERED DRAWER - BLACK	1
13	RSPDPR	PROTECTIVE RING (SET OF 4) - POWERED DRAWER	1
14	RSDRWPULLPOW	POWERED DRAWER PULL (EACH)	2
15	RSPSPD01	POWER STRIP (INCL. HARDWARE) - POWER DRAWER	1
16	RSPSCGR	POWER STRIP COVER - GREEN	1
16	RSPSCPP	POWER STRIP COVER - PURPLE	1
16	RSPSCGY	POWER STRIP COVER - THUNDERSTORM GRAY	1
16	RSPSCBK	POWER STRIP COVER - BLACK	1
17	RSUPPDBK01	UPPER PARTITION (SET OF 3)	1
18	RSLPPDBK01	LOWER PARTITION (SET OF 3)	1
19	RSPC150	PROTECTIVE COIL (EACH) - 339.5X150	1
20	RSPC275	PROTECTIVE COIL (EACH) - 339.5X275	2
21	RS6INFDRWGR01	6" FULL DRAWER (EACH) - GREEN	1
21	RS6INFDRWPP01	6" FULL DRAWER (EACH) - PURPLE	1
21	RS6INFDRWGY02	6" FULL DRAWER (EACH) - THUNDERSTORM GRAY	1
21	RS6INFDRWBK02	6" FULL DRAWER (EACH) - BLACK	1
22	RS4INFDRWGR01	4" FULL DRAWER (EACH) - GREEN	1
22	RS4INFDRWPP01	4" FULL DRAWER (EACH) - PURPLE	1
22	RS4INFDRWGY02	4" FULL DRAWER (EACH) - THUNDERSTORM GRAY	1
22	RS4INFDRWBK04	4" FULL DRAWER (EACH) - BLACK	1
23	RS3INFDRWGR01	3" FULL DRAWER (EACH) - GREEN	3
23	RS3INFDRWPP01	3" FULL DRAWER (EACH) - PURPLE	3
23	RS3INFDRWGY02	3" FULL DRAWER (EACH) - THUNDERSTORM GRAY	3
23	RS3INFDRWBK04	3" FULL DRAWER (EACH) - BLACK	3
24	RS5INFDRWGR01	5" FULL DRAWER (EACH) - GREEN	1
24	RS5INFDRWPP01	5" FULL DRAWER (EACH) - PURPLE	1
24	RS5INFDRWGY01	5" FULL DRAWER (EACH) - THUNDERSTORM GRAY	1
24	RS5INFDRWBK03	5" FULL DRAWER (EACH) - BLACK	1
25	RS6INLCBK	6" LOCKING CASTER (EACH) - BLACK	2
26	RS6INRNLCBK	6" RIGID NON LOCKING CASTER (EACH) - BLACK	2
27	RS6INBKBK01	6" CASTER BOLT KIT - BLACK	1
28	RSBBSLIDE09	BALL BEARING SLIDE (PAIR)	9
29	RSPCBK	PROTECTIVE COVER BOLT KIT (32 PCS)	1
30	RSABUMP	ANGLED BUMPER (4 PCS)	1
31	RSSP8230SLIDE	ROLLER BEARING SLIDE (PAIR)	1
32	RSFDPCK	PLASTIC PUSH FASTENERS (4 PCS)	1
33	RS2INWTTGR	2" WRITING TABLE TOP - GREEN	1
33	RS2INWTTPP	2" WRITING TABLE TOP - PURPLE	1
33	RS2INWTTGY	2" WRITING TABLE TOP - THUNDERSTORM GRAY	1
33	RS2INWTTBK	2" WRITING TABLE TOP - BLACK	1
34	RSRBS	ROLLER BEARING SLIDE (PAIR)	1
35	RS3INHDRWGR	3" HIDDEN DRAWER (EACH) - GREEN	1
35	RS3INHDRWPP	3" HIDDEN DRAWER (EACH) - PURPLE	1
35	RS3INHDRWGY	3" HIDDEN DRAWER (EACH) - THUNDERSTORM GRAY	1
35	RS3INHDRWBK	3" HIDDEN DRAWER (EACH) - BLACK	1
36	RSTCBPHK	TOP COVER BACK PLATE HARDWARE KIT	1
37	RSLINER9PC	DRAWER LINER KIT (9 PCS)	1
38	RSRCLM	RUBBER COVER FOR LOCKING MECHANISM	1
39		PUSH HANDLE HARDWARE (INCL. W/ITEM 7)	1
40	RSDRWPULL03	ALUMINUM DRAWER PULL (EACH)	7
NS	RSPAINTJGSF321	TOUCH UP PAINT - GREEN	1
NS	RSPAINTJGSF323	TOUCH UP PAINT - PURPLE	1
NS	RSPAINTJGSF010	TOUCH UP PAINT - THUNDERSTORM GRAY	1
NS	RSPAINTJGSF114	TOUCH UP PAINT - BLACK	1