REVEL SIDE LOCKER

REVEL SIDE LOCKER INSTALLATION INSTRUCTIONS

IMPORTANT SAFETY INSTRUCTIONS- SAVE THESE INSTRUCTIONS

WARNING! REVEL SIDE LOCKERS MUST ONLY BE INSTALLED ON A TOOLBOX OF THE SAME SERIES OR SERIOUS INJURY MAY OCCUR.

WARNING! ALL SIDE LOCKERS MUST BE MOUNTED SECURELY TO A TOOLBOX BEFORE USE!

"Notice – a top chest or hutch is required to properly hang a locker on a toolbox. Hanging a locker directly from a toolbox without a top chest or hutch may result in damage to your toolbox and void the warranty".

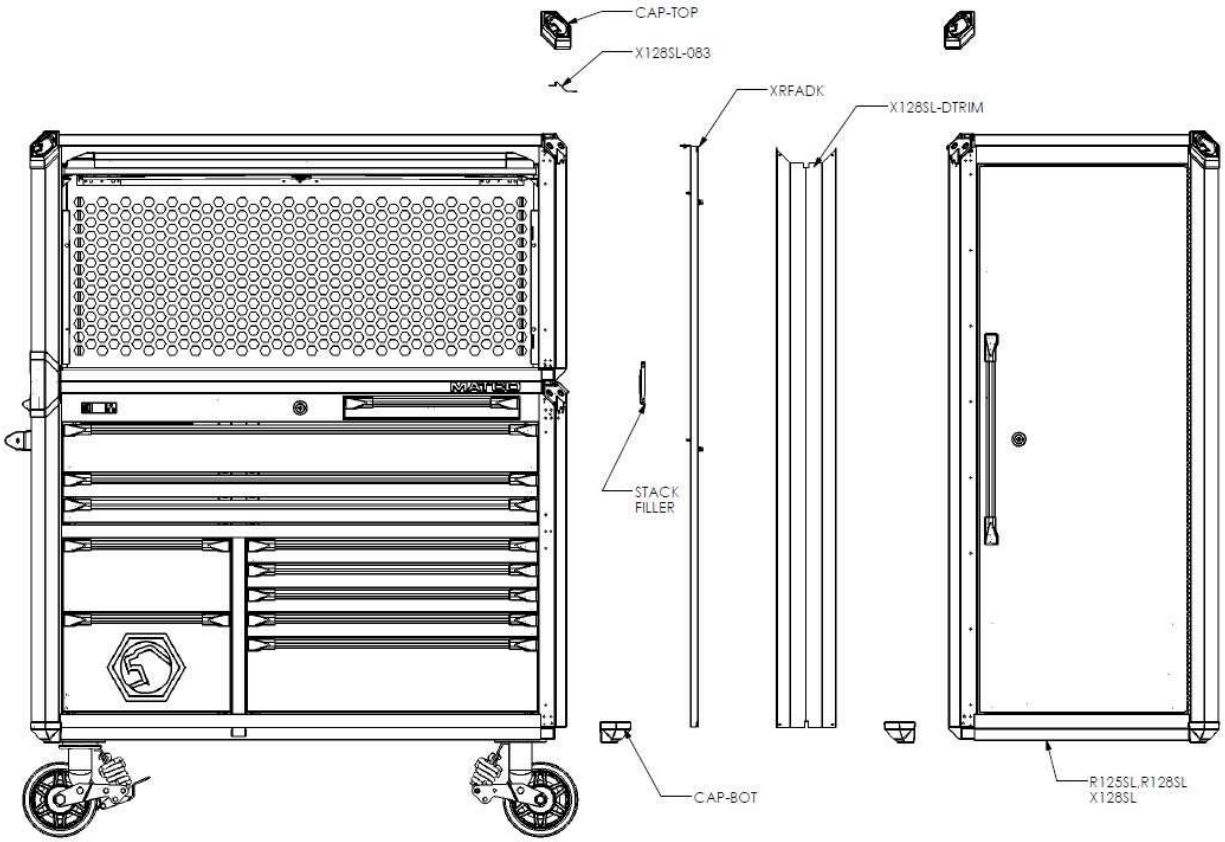

PART NUMBER	DESCRIPTION	QTY
R125SL	R 25 DEPTH SIDE LOCKER	
R128SL	R 28 DEPTH SIDE LOCKER	
X128SL	X28 DEPTH SIDE LOCKER	
X128SL-DTRIM*	DOUBLE TRIM	2
STACK-FILLRT*	STACK GAP FILLER RIGHT MOUNT	2
STACK-FILLLT*	STACK GAP FILLER LEFT MOUNT	
XRFADK*	SIDE LOCKER ADAPTER	1
CAP-TOP	TOP EAGLE CAP	2
CAP-BOT	BOTTOM CAP	2
X128SL-083*	TOP SKIRT	1
RIVT-020	3/16" X .5" BLACK RIVET	8
RIVT-016B	1/8" X .5" RIVET	15
BOLT-024	BOLT 1/4"-20x.500" HEX HEAD	6
PLUG-XXX	HOLE PLUG	4

Serial No. Range (After) - XXXXX

FOR TRIM REPLACE THE "" WITH THE DESIRED COLOR CODE

OUTLAW BLACK	BLK
SAPHIRE BLUE	DBL
TEXTURED BLACK	TBK
SUBLIME GREEN	SLG
TALON ORANGE	ORN
FIRE RED	FIR
BLACK SILVERVEIN	SVN
THUNDERSTORM GRAY	ANG
SUPERCHARGED SILVER	SCS
BLUE SILVER VEIN	DBV
PALE HORSE WHITE	PHW

REVEL SIDE LOCKER INSTALLATION INSTRUCTIONS

Installing a Revel Locker (Right Mounting)

1. Remove the front and back top caps, stack caps, top side skirt and corner trim from the hutch on the side that the locker will be installed.
2. Remove the front and back corner trim, top caps and bottom caps from the toolbox on the side that the locker will be installed.
3. Install the stack filler to the toolbox front and back into the same holes the corner trim used in the hutch and toolbox (spanning gap) using 1/8" dia. rivets (RIVT-016B) 2 each. (see image "B")
4. Hold the locker adapter plate up to the side of the toolbox/hutch stack and mount using (4) rivets (RIVT-016B) on the top and (6) bolts (BOLT-024) into the sides of the hutch and toolbox.(see image "A")
5. Lift the side locker up (WARNING! Do not try to lift side locker by yourself! A fork truck or pallet jack is suggested), then push the toolbox / hutch stack over and slowly lower the locker until the hanging curl at the top of the locker is fully seated on the top edge of the locker adapter. Be sure to align so that the front of the locker and the front of the hutch are on the same plane. (see image "C")
6. Run bolts from the inside of the locker into the adapter plate. Remove drawers to access lower bolt holes. Do not tighten bolts until trim is aligned correctly.
7. Install double wide sheet metal trim to the front and back covering the gap between the locker and the toolbox / hutch stack. Use rivets [1/8" dia. (RIVT-016B) 4 rivets per piece of trim].
8. Tighten all (6) bolts that attach side locker to unit and insert hole plugs.
9. Reinstall side locker drawers
10. Install the provided top skirts to the top of the locker and hutch in the gap area. [1/8" dia. rivets (RIVT-016B)]
11. Install the top caps to the top corners of the locker and hutch.
12. Install the bottom caps to the bottom corners of the locker and hutch using rivets. [3/16" dia. rivets (RIVT-020)]

Installing a Revel Locker (Left Mounting)

1. Remove the front and back top caps, stack caps, top side skirt and corner trim from the hutch on the side that the locker will be installed.
2. Remove the front and back corner trim, top caps and bottom caps from the toolbox on the side that the locker will be installed.
3. Open work surface. Using the quick disconnect feature on the drawer remove the drawer.
   Note: drawer is no longer usable once side locker is installed. Save drawer for future use if side locker is removed.
4. Install the stack filler to the toolbox front and back into the same holes the corner trim used in the hutch and toolbox (spanning gap) using 1/8" dia. rivets (RIVT-016B) 2 each. (see image "B")
5. Hold the locker adapter plate up to the side of the toolbox/hutch stack and mount using (4) rivets (RIVT-016B) on the top and 6 bolts into the sides of the hutch and toolbox. (see image "A")

6) Lift the side locker up (WARNING! Do not try to lift side locker by yourself! A fork truck or pallet jack is suggested), then push the toolbox / hutch stack over and slowly lower the locker until the hanging curl at the top of the locker is fully seated on the top edge of the locker adapter. Be sure to align so that the front of the locker and the front of the hutch are on the same plane. (see image "C")

7) Run bolts from the inside of the locker into the adapter plate. Remove drawers to access lower bolt holes. Do not tighten bolts until trim is aligned correctly.
8) Install double wide sheet metal trim to the front and back covering the gap between the locker and the toolbox / hutch stack. Use rivets [1/8" dia. (RIVT-016B) 4 rivets per piece of trim].
9) Tighten all (6) bolts that attach side locker to unit and insert hole plugs.
10) Reinstall side locker drawers
11) Install the provided top skirts to the top of the locker and hutch in the gap area. [1/8" dia. rivets RIVT-016B)]
12) Install the top caps to the top corners of the locker and hutch.
13) Install the bottom caps to the bottom corners of the locker and hutch using rivets. [3/16" dia. rivets (RIVT-020)]

REVEL SIDE LOCKER

REVEL SIDE LOCKER INSTALLATION INSTRUCTIONS

Changing Side Locker Door Orientation

1) Open door and remove screws from hinge to cabinet. Make sure to support the door.
2) Rotate the door so that handle is on the opposite side.
3) Remove magnetic latch on the door opening and attach to opposite side on the door opening on the cabinet.
4) Remove magnetic catch from door and attach to top of the door so that catch and latch align
5) Install door hinge screws into opposite side of cabinet.
6) Make sure door opens and closes correctly
7) Test lock to assure correct function

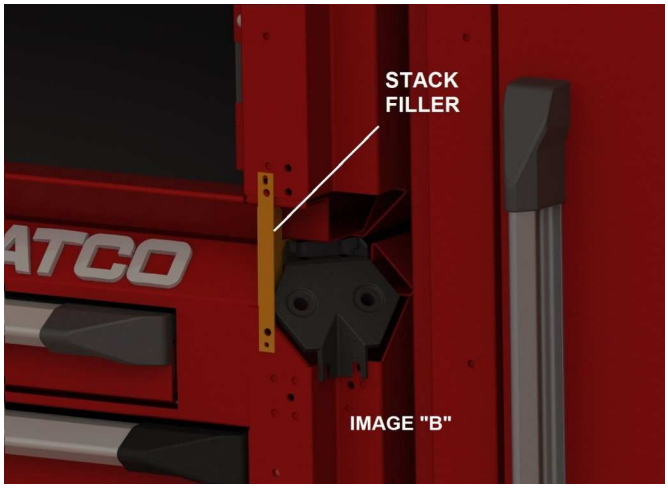

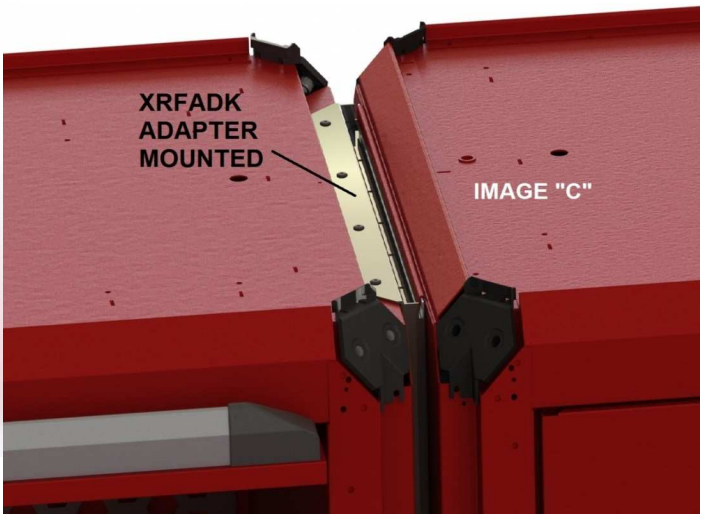

©2017 MATCO TOOLS. All rights reserved. Matco Tools® and their respective logos are registered trademarks of Matco Tools in the United States and in other countries.