4328TB

REV M
09/17/2026

4S 3BAY 28” TOOLBOX BREAKDOWN SHEET



TABLE OF CONTENTS:

Cover sheet……Pg. 1
Exploded TB view……..Pg. 2
Unit Specifications……Pg. 2
Replacement Part list……Pg. 3-4
Drawer Configuration Detail……Pg. 5
Power Drawer Detail……..Pg. 6-7
Emblem Position Detail……..Pg. 7
Slide Assembly Detail……..Pg. 8
Locking Assembly Detail……..Pg. 8
Accessory/Stack Config Detail……Pg. 9
Document Revision Table……Pg. 9

©2026 MATCO TOOLS. All rights reserved. Matco Tools® and their respective logos are registered trademarks of Matco Tools in the United States and in other countries.

4328TB

REV M
09/17/2026

Figure 1: 4328TB Replacement Parts Exploded View

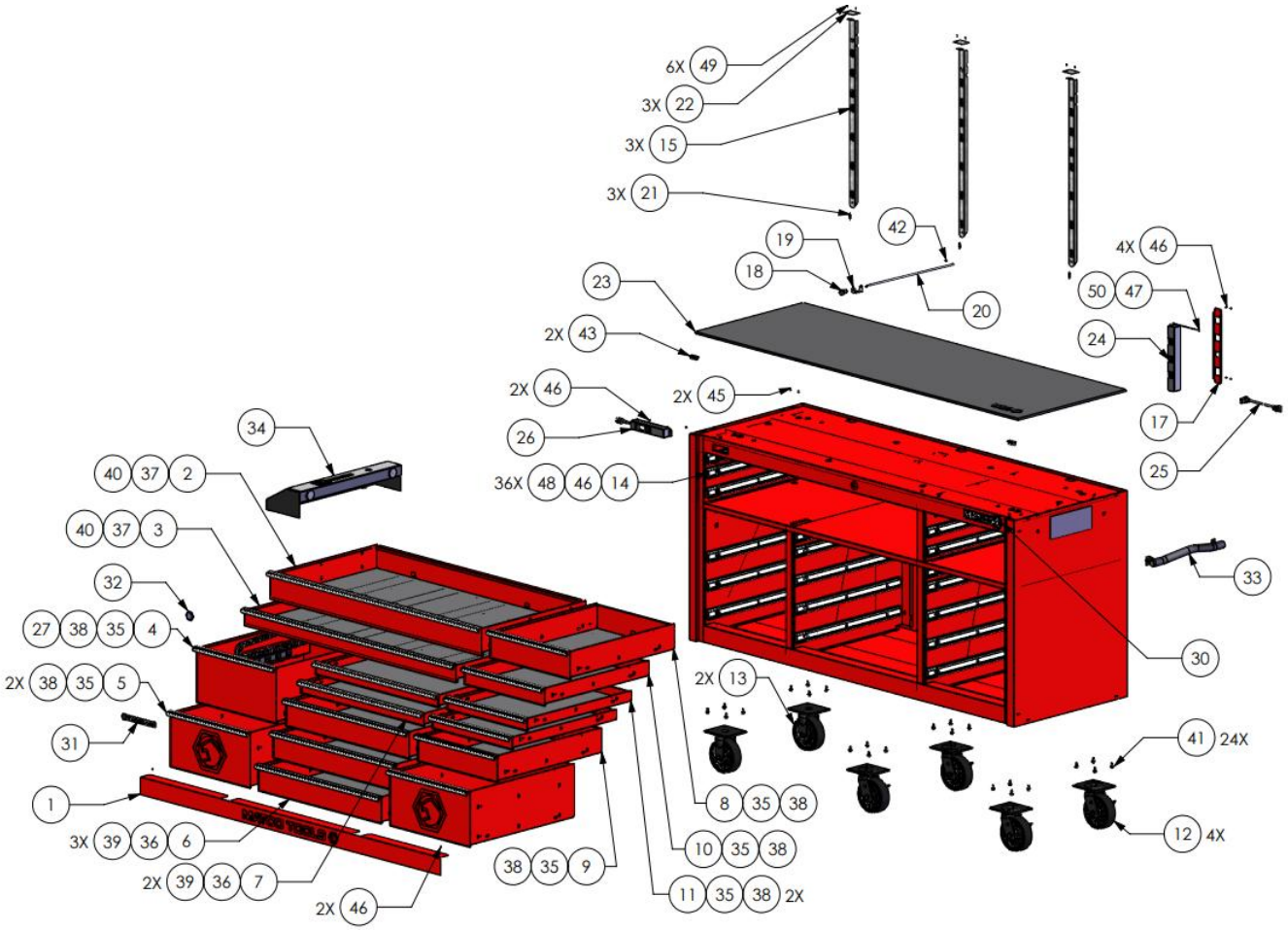

SPECIFICATIONS							
PART NUMBER	**DESCRIPTION**	**QTY**	**HEIGHT**	**WIDTH**	**DEPTH**	**SQ IN**	**CU IN**
42805L-USA	5” DEEP, LONG DWR	1	4.236	50.611	25.597	1,295	5,488
42803L	3” DEEP, LONG DWR	1	2.430	50.611	25.597	1,295	3,148
42810N PWR	10” DEEP, NARROW DWR W/ PWR	1	9.569	18.654	25.597	477	4,569
42810N	10” DEEP, NARROW DWR	2	9.569	18.654	25.597	477	4,569
42805W	5” DEEP, WIDE DWR	3	4.460	29.106	25.597	745	3,323
42802W	2” DEEP, WIDE DWR	2	1.907	29.106	25.597	745	1,421
42805A	5” DEEP, NARROW DWR	1	4.590	18.654	25.597	477	2,192
42805N	5” DEEP, NARROW DWR	1	4.441	18.654	25.597	477	2,121
42803N	3” DEEP, NARROW DWR	1	2.785	18.654	25.597	477	1,330
42802N	2” DEEP, NARROW DWR	2	1.907	18.654	25.597	477	911
TOTAL / OVERALL		**15**	**44**	**79**	**28**	**10,131**	**42,619**

©2026 MATCO TOOLS. All rights reserved. Matco Tools® and their respective logos are registered trademarks of Matco Tools in the United States and in other countries.

4328TB

REV M
09/17/2026

REPLACEMENT PARTS LIST			
ITEM NO.	**PART NO.**	**DESCRIPTION**	**QTY. /BOX**
1	STKICK-4328TB	4328TB KICKPLATE	1
2	42805L-USA	5” DEEP LONG DRAWER	1
3	42803L	3” DEEP LONG DRAWER	1
4	42810NPWR	10” DEEP NARROW PWR DRAWER	1
5	42810N	10” DEEP NARROW DRAWER (EMBOSSED)	1
6	42805W	5” DEEP WIDE DRAWER	3
7	42802W	2” DEEP WIDE DRAWER	2
8	42805A	5” DEEP NARROW DRAWER	1
9	42805N	5” DEEP NARROW DRAWER	1
10	42803N	3” DEEP NARROW DRAWER	1
11	42802N	2” DEEP NARROW DRAWER	2
12	CSTR-026CSA	6 X 2 BLACK SWIVEL CASTER	4
13	CSTR-046CSA	6 X 2 BLACK RIGID CASTER	2
14	CHRN-625D	28” DRAWER SLIDES	36
15	4228TB044	4228TB LOCKBAR	3
16	4228TB096[3]	NARROW SECRUITY LID FOR 42810N DWR	*
17	4228TB066	JUNCTION BOX COVER PLATE	1
18	LOCK-017XX[1]	LOCK W/ 2 KEYS	1
-	LOCK-023	SECURITY LID LOCK W/ CAM (GOLD)	*
19	MLRA-007	LOCK CAM	1
20	RODS-22TB	LOCK ROD	1
21	SPRG-011	LOCKBAR SPRING	3
22	COVER-TB	LOCKBAR ACCESS PLATE	3
23	RPT-4328TB	TOP BOARD	1
24	PWR-JBXB	JUNCTION BOX	1
25	PWR-CRDSJTOWB[3]	JUNCTION BOX ELECTRICAL CORD	1
26	PS8U4A48B	FRONT CONVENIENCE POWERSTRIP	1
27	RVL28PWDWASY	POWER DRAWER POWER STRIP ASSEMBLY	1
28	TRAK-EMB[3]	FEMALE CABLETRACK ENDLINK	1
29	TRAK-EFB[3]	MALE CABLETRACK ENDLINK	1
30	NMPL-MATCO4XX[1]	MATCO 4S NAMEPLATE	1
31	NMPL-POWER[4]	PINNED POWER DRAWER EMBLEM	1
32	NMPL-USA[4]	PINNED USA EMBLEM	1
33	SHNDL-400	SIDE HANDLE HDWE KIT	1
34	PWRORG28	POWER TOOL ORGANIZER FOR 28” TOOLBOX **(MFG BEFORE 9/4/26 USED PTH-TB, REPLACED WITH PWRORG28)**	1
35	HNDL4-XX19466[1]	4S NARROW DRAWER HANDLE	8
36	HNDL4-XX29922[1]	4S WIDE DRAWER HANDLE	5
37	HNDL4-XX51307[1]	4S LONG DRAWER HANDLE	2

(NOTES ON PAGE 4)

©2026 MATCO TOOLS. All rights reserved. Matco Tools® and their respective logos are registered trademarks of Matco Tools in the United States and in other countries.

4328TB

REV M
09/17/2026

REPLACEMENT PARTS LIST				
ITEM NO.	**PART NO.**	**DESCRIPTION**		**QTY. /BOX**
38	L428N	4S NARROW DRAWER LINER		8
39	L428W	4S WIDE DRAWER LINER		5
40	L428L	4S LONG DRAWER LINER		2
41	BOLT-012[2]	CASTER BOLTS		24
42	CAPS-020	LOCKROD CAP		1
43	CAPS-025	4S CORNER POST END CAP		2
44	HDWE-CORESH[3]	SIDE HANDLE HARDWARE		1
45	SCRW-M11B[2]	#10X3/8" SHEET METAL BLK SCREW		2
46	SCRW-027[2]	#8-32 X ¼" PHILLIPS HEAD PAN SCREW		44
47	SCRW-040	#10-32 X 3/8" GRN GROUND SCREW		1
48	SCRW-047[2]	#8-32 X ¼" TORX HEAD PAN SCREW		36
49	RIVT-016[2]	1/8" BLIND DOME RIVET		6
50	NUTS-037	#10-32 KEEP NUT		1
51	OMNL12[3]	OWNERS MANUAL		1
52	SST-4328TB[3]	STAINLESS STEEL TOP ACCESSORY FOR 4328TB		*
53	HDWE-SSWSA[3]	HARDWARE BAG FOR STAINLESS STEEL TOP		*
54	ACT-55422[3]	REPLACEABLE LOCK ACTUATOR	ONLY ON UNITS MFG **AFTER** 04/15/2026 (SN 01167703)	1

NOTE 1: 'XX' = COLOR CODE. SEE CHART BELOW:

'B' = BRIGHT BLACK	'MB' = TACTICAL BLACK	'C' = BRIGHT CHROME	'R' = BRIGHT RED
'O' = BRIGHT ORANGE	'GR' = BRIGHT GREEN	'BU' = BRIGHT BLUE	'P' = BRIGHT PURPLE

NOTE 2: AVAILABLE IN BULK PACKS, EX. SCRW-027 AVAILABLE IN P-SCRW-027

NOTE 3: NOT PICTURED IN MAIN ASSEMBLY VIEW

NOTE 4: FOR TB UNITS BUILT PRIOR TO MARCH 2026, PLASTIC LOCATING PINS ON THE BACK OF EMBLEM WILL NEED TO BE REMOVED USING WIRE CUTTERS OR END CUTTER PLIERS FOR FULL REPLACEMENT FITMENT.

*QTY 1X, UPGRADE OPTION, NON-STANDARD

©2026 MATCO TOOLS. All rights reserved. Matco Tools® and their respective logos are registered trademarks of Matco Tools in the United States and in other countries.

Figure 2: 4328TB Drawer Configuration

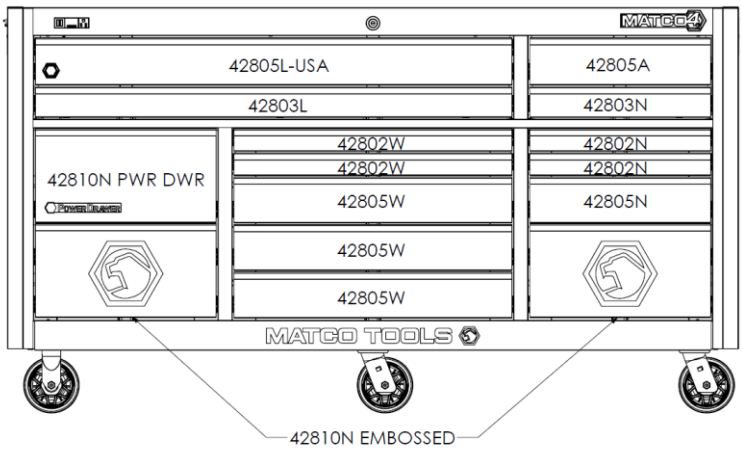

Figure 3 - Table 1: 4328TB Drawer Variants

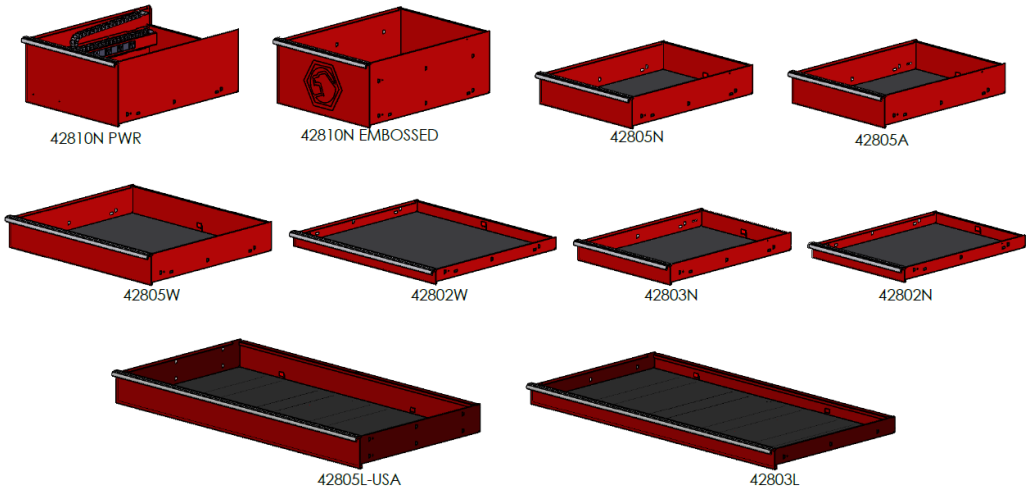

Drawer Part No.	Description	Handle Part No.	Liner Part No.	Slide Sets	Additional Detail?
42805L-USA	5” DEEP LONG DWR	HNDL4-X51307	L428L	2	-
42803L	3” DEEP LONG DWR	HNDL4-X51307	L428L	1	-
42810NPWR	10” DEEP NARROW W/ PWR	HNDL4-X19466	L428N	1	Fig.#4
42810N	10” DEEP NARROW EMBSSD	HNDL4-X19466	L428N	2	-
42805W	5” DEEP WIDE DWR	HNDL4-X29922	L428W	1	-
42802W	2” DEEP WIDE DWR	HNDL4-X29922	L428W	1	-
42805A	5” DEEP NARROW DWR	HNDL4-X19466	L428N	1	-
42805N	5” DEEP NARROW DWR	HNDL4-X19466	L428N	1	-
42803N	3” DEEP NARROW DWR	HNDL4-X19466	L428N	1	-
42802N	2” DEEP NARROW DWR	HNDL4-X19466	L428N	1	-

©2026 MATCO TOOLS. All rights reserved. Matco Tools® and their respective logos are registered trademarks of Matco Tools in the United States and in other countries.

Figure 4: 42810N Power Drawer for 4328TB Detail

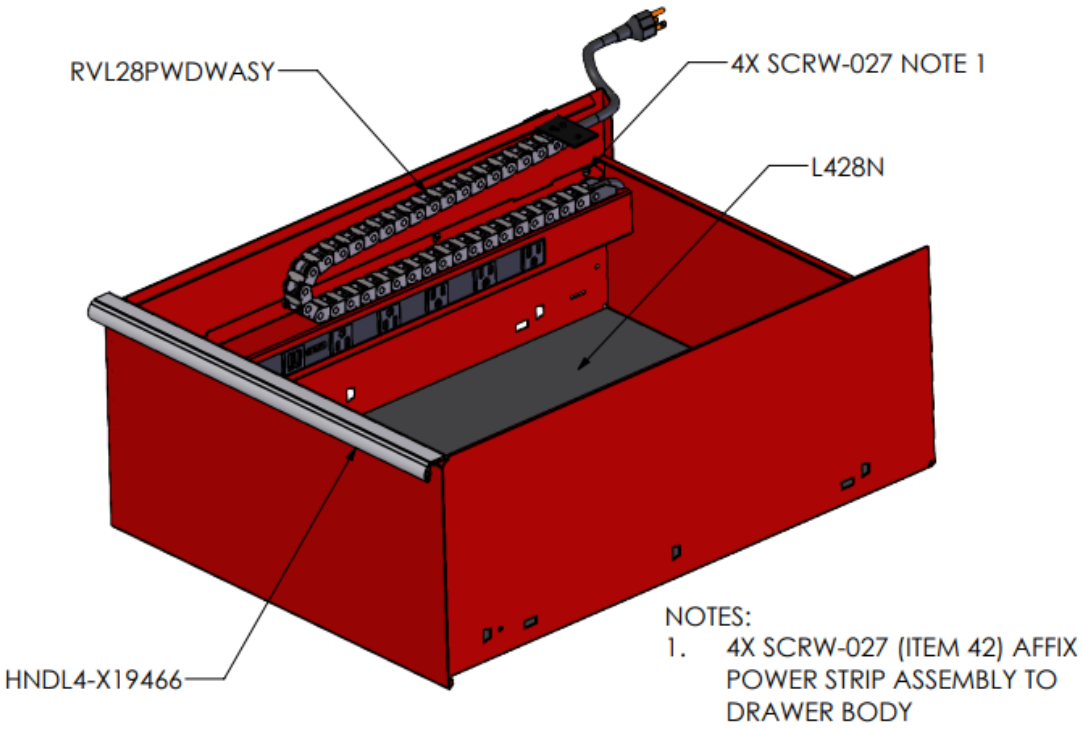

Figure 5: 4328TB Power Drawer Power Strip Detail

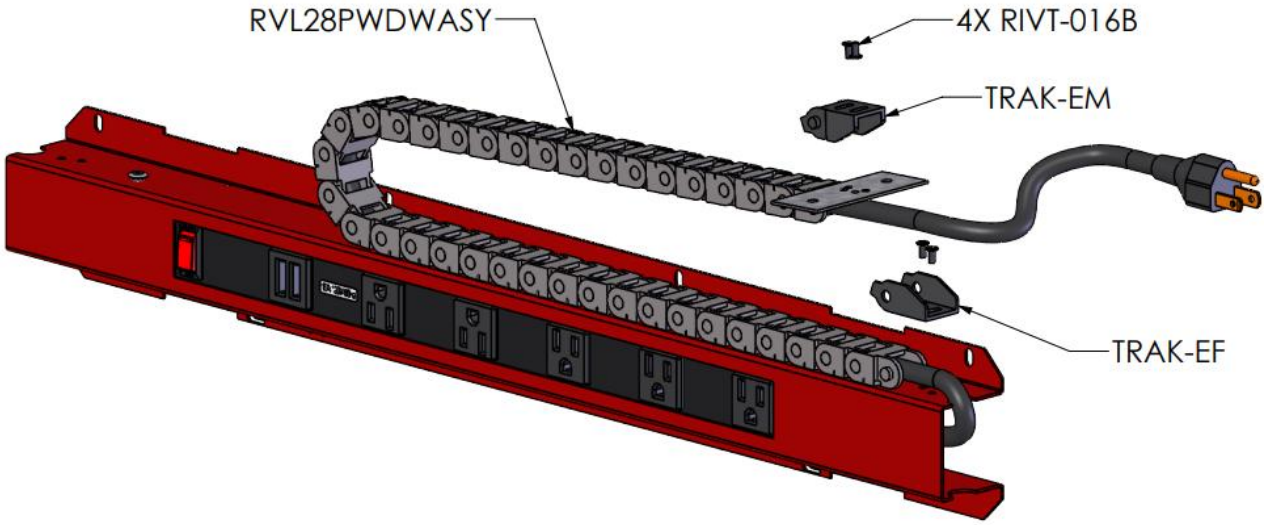

©2026 MATCO TOOLS. All rights reserved. Matco Tools® and their respective logos are registered trademarks of Matco Tools in the United States and in other countries.

Figure 6: Emblem Positions for 4328TB

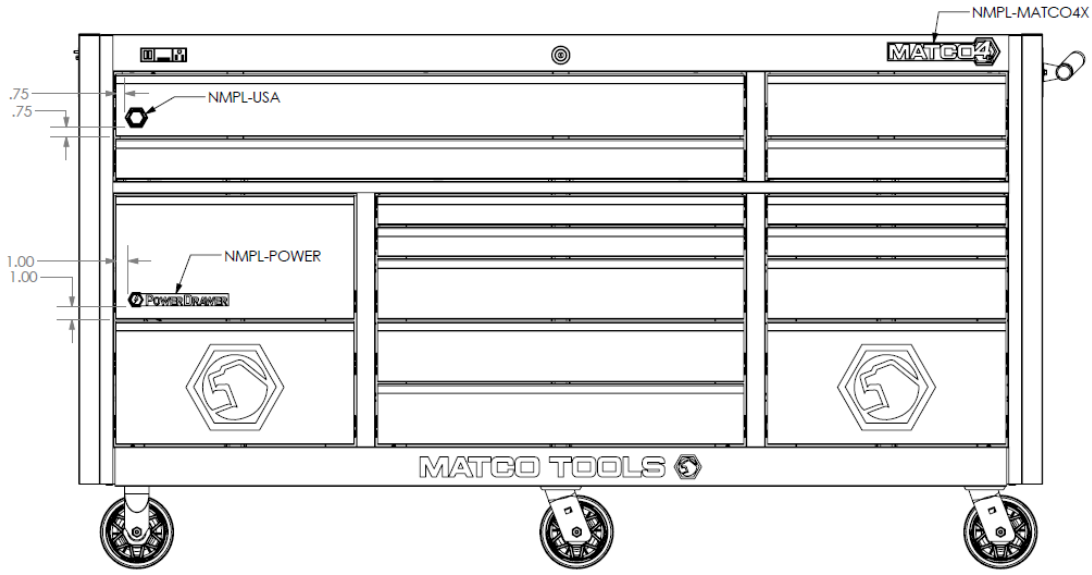

NOTES:
1. POST MARCH 2026, ALL EMBLEMS POSITIONED VIA LOCATING HOLES IN CASE/DRAWERS

Figure 7: Slide Assembly Detail

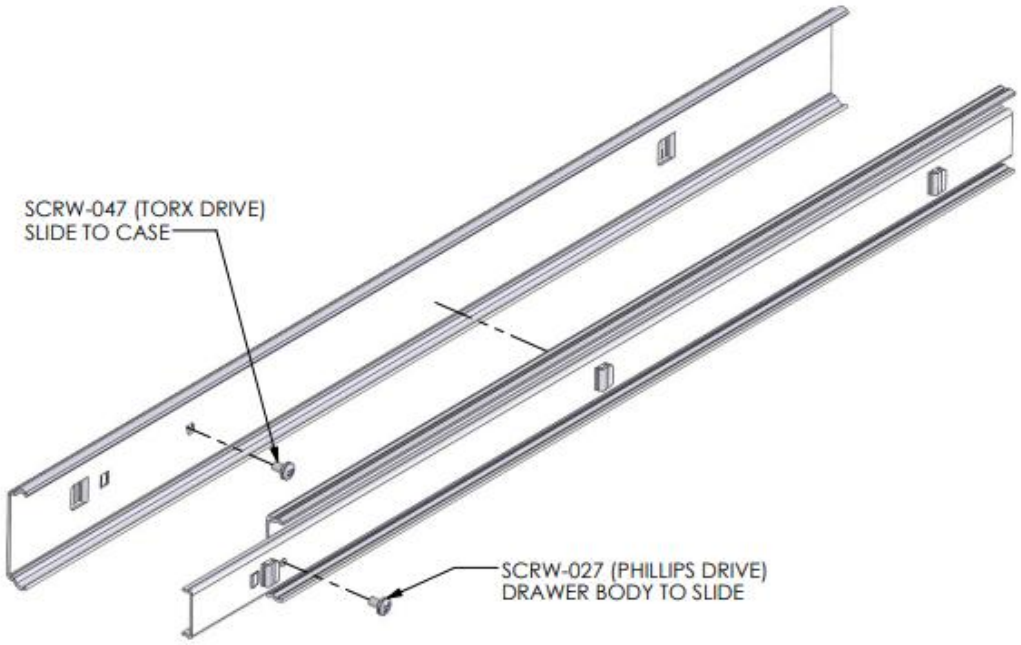

©2026 MATCO TOOLS. All rights reserved. Matco Tools® and their respective logos are registered trademarks of Matco Tools in the United States and in other countries.

Figure 8: Replacement Parts Locking Assembly Detail for 4328TB

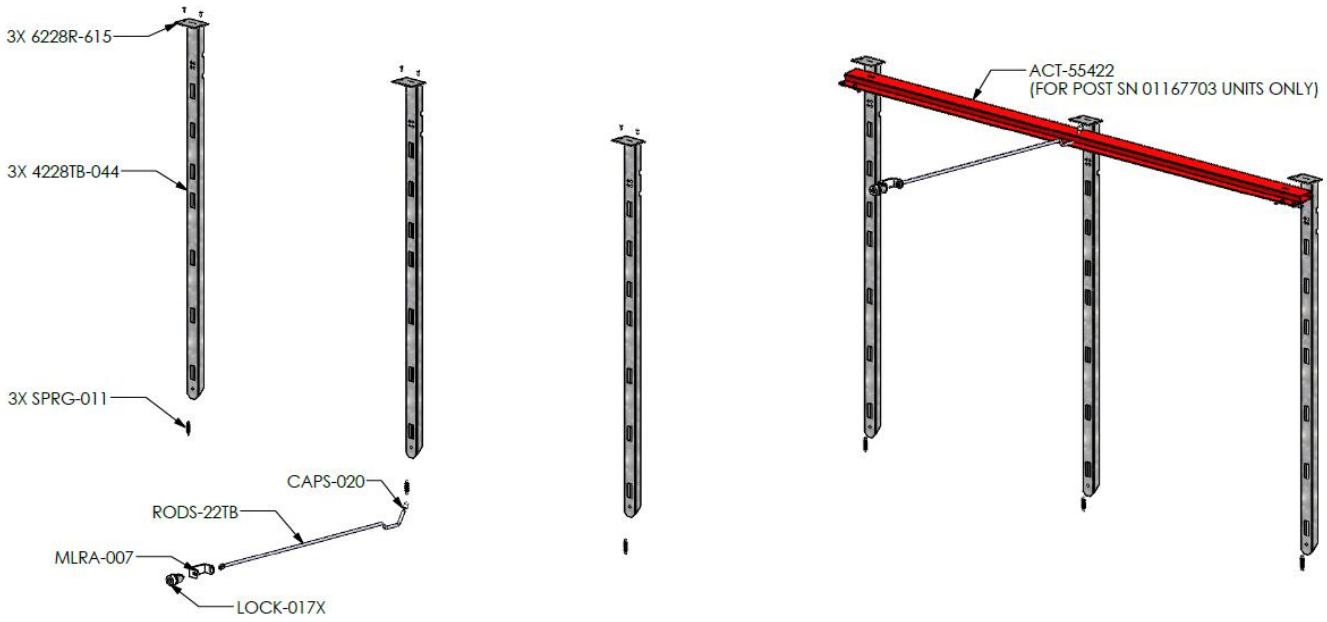

Figure 9: PWRORG28 Tool Holster Reference Detail

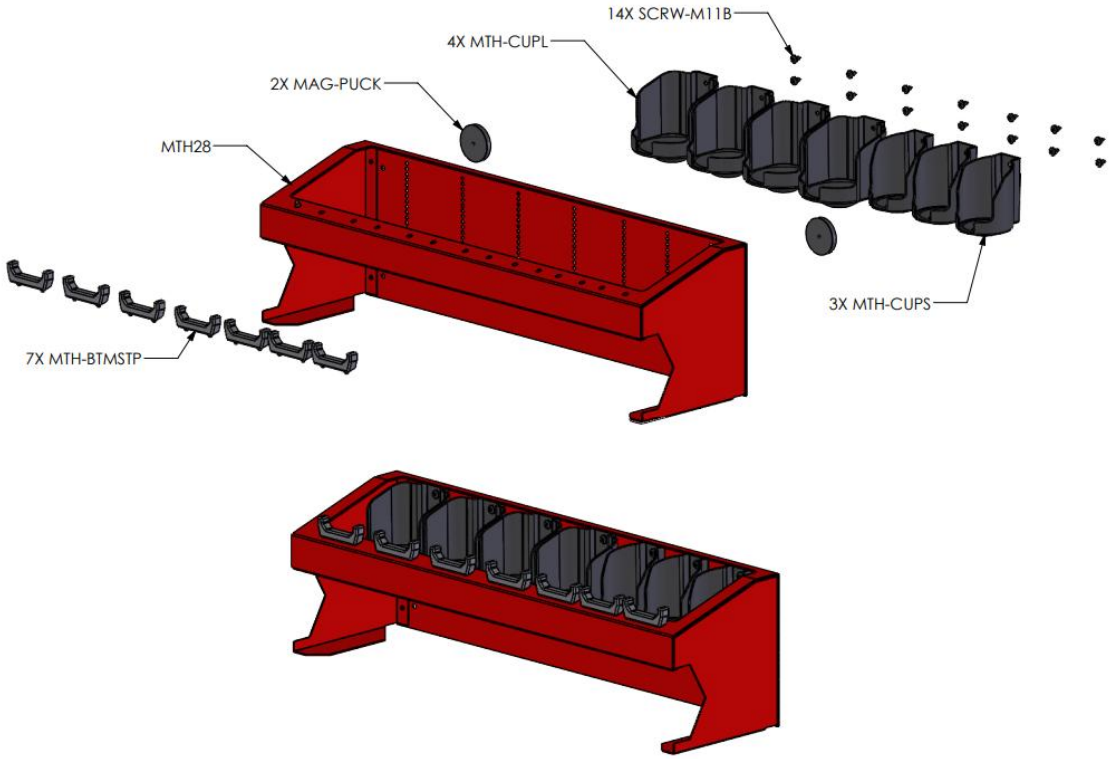

©2026 MATCO TOOLS. All rights reserved. Matco Tools® and their respective logos are registered trademarks of Matco Tools in the United States and in other countries.

4328TB

REV M
09/17/2026

4328TB AVAILABLE ACCESSORIES DETAIL	
UNIT	**DESCRIPTION**
4328HTC	4S 28” 3 BAY HUTCH
4328HCA	4S 28” 3 BAY HALF CHEST
4328TDA	4S 28” 3 BAY TOP DRAWER ACCESSORY
4028LKR	4S 28” RIGHT/LEFT LOCKER

4328TB STACK CONFIGURATIONS & DIMENSIONS

ALL DIMENSIONS WITH STD CASTERS, NO SIDE HANDLES, LENGTH” X WIDTH” X HEIGHT” ROUNDED TO NEAREST INCH.

TOOLBOX UNIT ONLY	**79” X 28” X 44”**
STACKED WITH: HUTCH (HTC/HCA)	**79” X 28” X 72”**
STACKED WITH: TOP DRAWER (TDA)	**79” X 28” X 52”**
STACKED WITH: HUTCH (HTC/HCA) TOP DRAWER (TDA)	**79” X 28” X 80”**
STACKED WITH: HUTCH (HTC/HCA) 1X LOCKER (LKR)	**105” X 28” X 72”**
STACKED WITH: HUTCH (HTC/HCA) 2X LOCKERS (LKR)	**131” X 28” X 72”**
STACKED WITH: HUTCH (HTC/HCA) TOP DRAWER (TDA) 1X LOCKER (LKR)	**105” X 28” X 80”**
STACKED WITH: HUTCH (HTC/HCA) TOP DRAWER (TDA) 2X LOCKERS (LKR)	**131” X 28” X 80”**

REVISION	DESCRIPTION	DATE	EC #	BY
K	CORRECTED SPECIFICATION WIDTH FROM 57” TO 79” (PG.#2), CORRECTED PN# PWR-CRDSTOW TO PWR-CRDSJTOW (PG.#3), UPDATED POWERSTRIP IMAGE (EC-24-0059) TO SHOW 4X RIVT-016B, WAS 3X (PG.#6). CHANGED LOCKROD PN FROM RODS-025 TO RODS-22TB.	11/12/24	EC-24-0046 EC-24-0059	KRL
L	ADDED REPLACEABLE ACTUATOR ACT-55422 (FOR SN 01167705 AND FORWARD) UPDATED BREAKDOWN SHEET FORMATING, ADDED ACCESSORY/STACK CONFIG DETAIL, UPDATED ALL POWER PNS	4/21/2026	EC-24-0089 EC-24-0077 EC-25-0038	KRL
M	MODIFED 4S NAME PLATE PN FROM NMPL-MATCO4SX FORMAT TO NMPL-MATCO4X. ADDED GREEN AND ORANGE TRIM & NAMEPLATES. SWAPPED PTH-TB FOR PWRORG28. ADDED ACCESSORY COMPATIBILITY AND STACK SIZE CHARTS. ADDED PWRORG28 PART DETAIL.	9/17/26	EC-24-0100 EC-26-0016 EC-26-0032	KRL

©2026 MATCO TOOLS. All rights reserved. Matco Tools® and their respective logos are registered trademarks of Matco Tools in the United States and in other countries.