X128SL

REVEL X 28" SIDE LOCKER

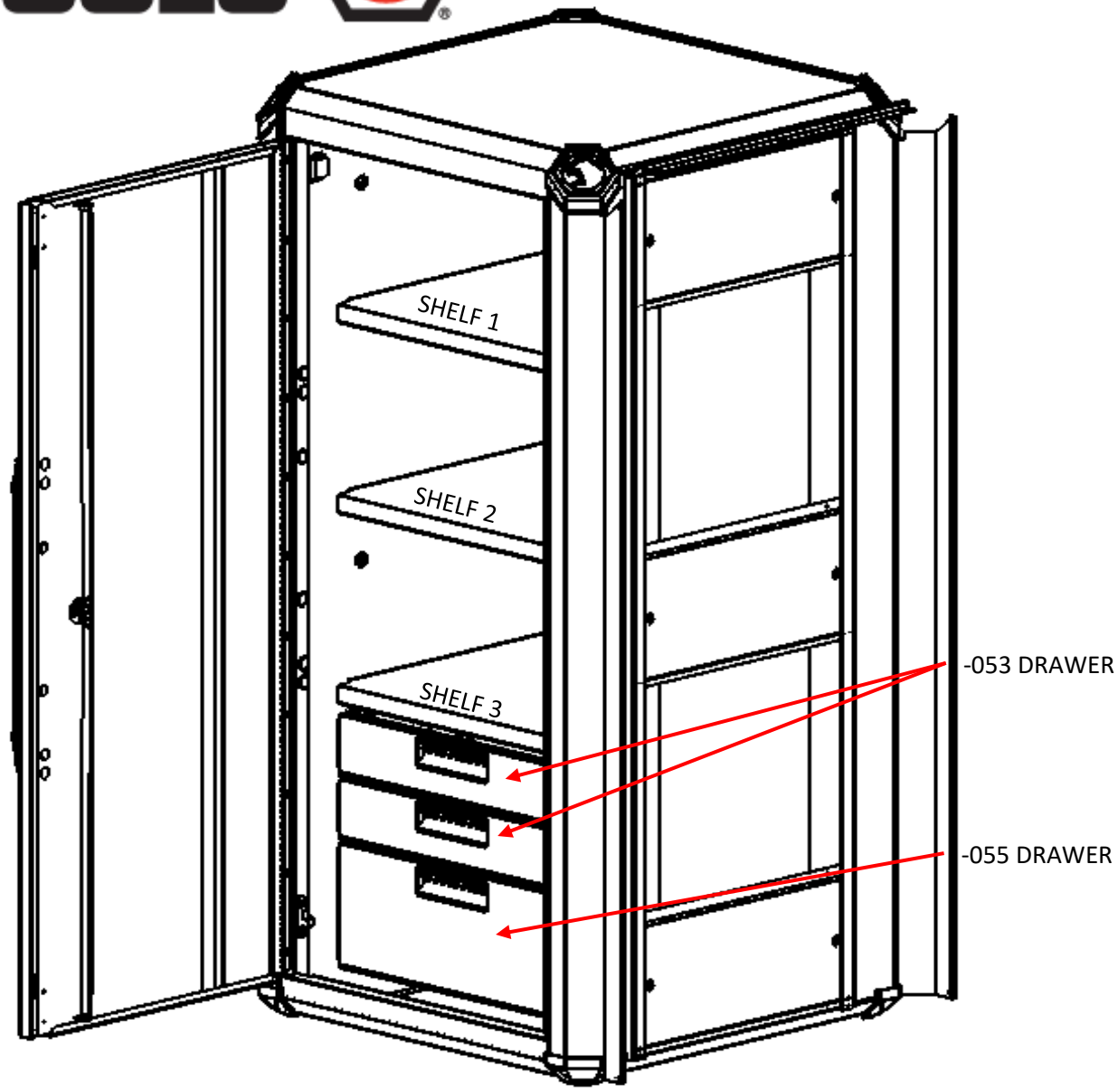

SPECIFICATIONS

PART NUMBER	DESCRIPTION	QTY	HEIGHT	WIDTH	DEPTH	SQ IN	CU IN
X1258L-053	DRAWER	2	3.866	19.349	23.478	908.6	3,512
X128SL-055	DRAWER	1	8.237	19.349	23.478	454	3,742
X128SL-731	LEVEL 3 SHELF	1	12.125	20.800	24.500	510	6,179
X128SL-731	LEVEL 2 SHELF	1	12.125	20.800	24.500	510	6,179
X128SL-731	LEVEL 1 SHELF	1	12.069	20.800	24.500	510	6,150
TOTAL / OVERALL		**6**	**65.500**	**29.600**	**30.200**	**2,382**	**19,612**

**ALL DIMENSIONS IN INCHES*

*** SHELF OPTIONS (NOT STANDARD)*

X128SL

REVEL X 28" SIDE LOCKER

REPLACEMENT PARTS			
ITEM	**PART #**	**DESCRIPTION**	**QTY/BOX**
1	BOLT-040	5/16-18 IN X 4 IN HEX BOLT	2
2	CAP-BOT	BOTTOM CORNER CAP	4
3	CAP-INNER	INNER CORNER CAP	4
4	CAP-SLBOT	HANDLE END CAP	1
5	CAP-SLTOP	HANDLE END CAP	1
6	CAP-TOP	TOP CORNER CAP	4
7	CHRN-622M	DRAWER SLIDE	6
8	GIDE-020	SNAP BUSHING	2
9	GROM-250	POWER GROMMET	7
10	HDWE-REVELSL	REVEL LOCKER HARDWARE KIT	1
11	HNGE-128SL	LOCKER HINGE	1
12	L28SL	DRAWER LINER	3
13	NMPL-LHEX	LARGE HEX NAMEPLATE - CHROME	1
	NMPL-LHEXB	LARGE HEX NAMEPLATE - BLACK	
	NMPL-LHEXBU	LARGE HEX NAMEPLATE - BLUE	
	NMPL-LHEXR	LARGE HEX NAMEPLATE - RED	
	NMPL-LHEXGR	LARGE HEX NAMEPLATE - GREEN	
	NMPL-LHEXO	LARGE HEX NAMEPLATE - ORANGE	
14	NMPL-MATCOC	MATCO NAMEPLATE - CHROME	1
	NMPL-MATCOB	MATCO NAMEPLATE - BLACK	
	NMPL-MATCOBU	MATCO NAMEPLATE - BLUE	
	NMPL-MATCOR	MATCO NAMEPLATE - RED	
	NMPL-MATCOGR	MATCO NAMEPLATE - GREEN	
	NMPL-MATCOO	MATCO NAMEPLATE - ORANGE	
15	LOCK-017	1 TUBAR LOCK W/ 2 KEYS	1
	LOCK-017B	1 TUBAR LOCK W/ 2 KEYS (BLACK)	
16	LTCH-DOOR	DOOR LATCH	1
17	MLRL-451BO	LOCKROD LEVER	1
18	OMNL16	OWNERS MANUAL	1
19	PHX-C18000	DOOR HANDLE - CHROME	1
	PHX-B18000	DOOR HANDLE - BLACK	
	PHX-BU18000	DOOR HANDLE - BLUE	
	PHX-R18000	DOOR HANDLE - RED	
	PHX-GR18000	DOOR HANDLE - GREEN	

	PHX-O18000	DOOR HANDLE - ORANGE	
20	PULL-C6	PULL HANDLE - CHROME	3
	PULL-B6	PULL HANDLE - BLACK	
	PULL-BU6	PULL HANDLE - BLUE	
	PULL-R6	PULL HANDLE - RED	
	PULL-GR6	PULL HANDLE - GREEN	
	PULL-O6	PULL HANDLE - ORANGE	
21	RODS-X128SL	LOCK ROD	2
22	SCRW-027	8-32X1/4"PPH SCREW (DWR TO	17
24	TAPE-011	3/8X1-1/2X1/32 IN BLACK URET	2
25	TRMX-C62296	REVEL TRIM - CHROME	2
	TRMX-B62296	REVEL TRIM - BLACK	
	TRMX-BU62296	REVEL TRIM - BLUE	
	TRMX-R62296	REVEL TRIM - RED	
	TRMX-GR62296	REVEL TRIM - GREEN	
	TRMX-O62296	REVEL TRIM - ORANGE	
26	X125SL-141-60	LOCKER DOOR	1
27	X128SL-045	TOP REAR SKIRT	1
28	X128SL-063	BOTTOM BACK SKIRT	1
29	X128SL-083	TOP STACK SKIRT	1
30	X228TB-083	TOP SIDE SKIRT	2
31	X128SL-085	BOTTOM FRONT SKIRT	1
32	X228TB-735	BOTTOM SIDE SKIRT	2
33	X128SL-DTRIM	DOUBLE WIDE TRIM	2
34			
35			

REVISION	DESCRIPTION	DATE	BY	EC #
A	CREATION	1/30/2019	SRG	