Parts Breakdown

BR7 - BLIND RIVET ADAPTER KIT

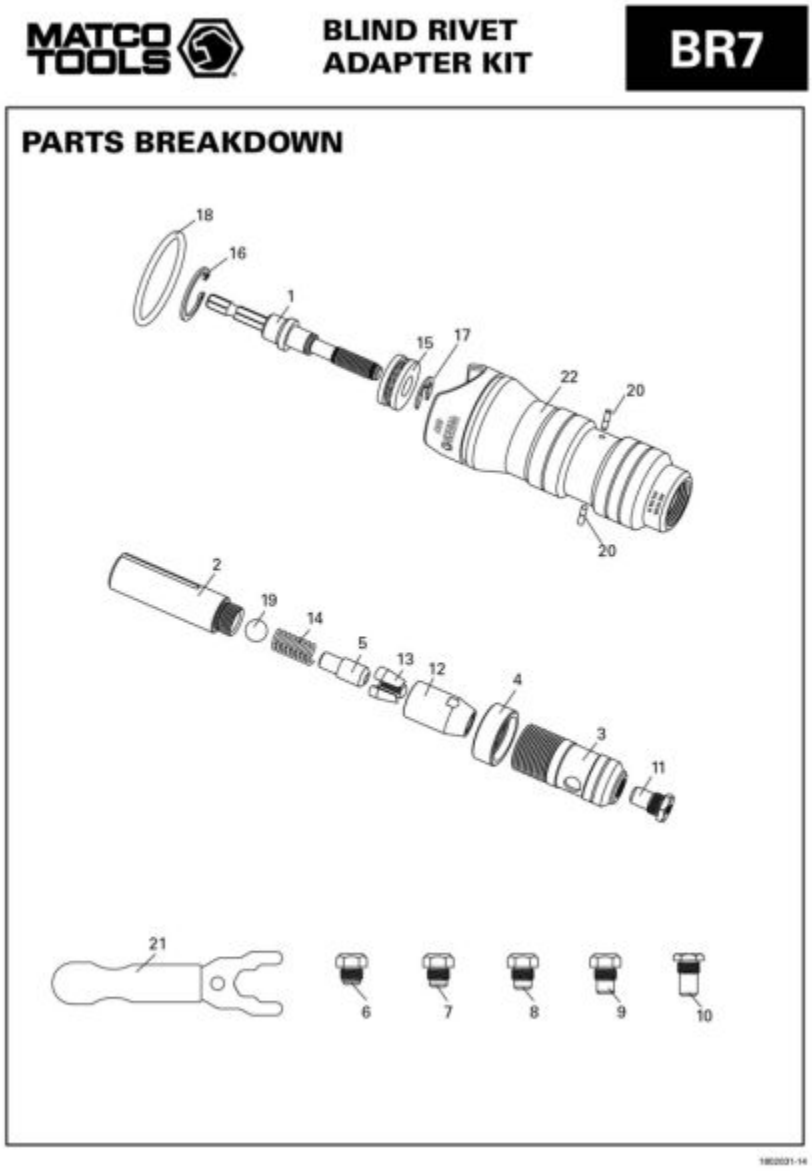

Item: BR7

Description: BLIND RIVET ADAPTER KIT

Notes: N/A

Figure No	Part Number	Description	No. Reqd	Warranty Code
1	H1ADN14-01	HEX SHANK DRIVING SHAFT	1	D
2	H1ADR36-02	PLUNGER TUBE F/ BR7	1	L
3	H1ADR14-02	FRONT BUSHING W/KNURLING	1	L
4	*H1ADR36-04	LOCKING BUSHING	1	
5	H1ADR36-05	PLUNGER	1	L
6	H1BR7-6	3/32 NOSEPIECE F/BR7	1	D
7	H1BR7-5	1/8 NOSEPIECE F/BR7	1	D
8	H1BR7-4	5/32 NOSEPIECE F/BR7	1	D
9	H1BR7-3	3/16 NOSEPIECE F/BR7	1	D
10	H1BR7-1	1/4 NOSEPIECE F/BR7	1	D
11	H1BR7-2	7/32 NOSEPIECE F/BR7	1	D
12	H1ADR14-03	CHUCK JAW TUBING F/BR7	1	L
13	H1ADR36-12	CHUCK JAWS PIECES(3PCS)	1	L
14	H1ADR14-04	INNER SPRING F/ BR7	1	L
15	H1RN9-25	THRUST BALL BEARING F/BR7	1	X
16	H1ADN14-26	C-CLIP F/RN9	1	T
17	H1ADN14-27	E-CLIP F/ RN9	1	L
18	*H1RN9-30	O-RING	1	
19	H1ADR36-17	STEEL BALL F/BR7	1	L
20	H1ADN14-29	PINS FOR BR7	2	L
21	H1BR7-7	WRENCH F/BR7 RN9	1	D
22	H1MATBR7-01	ALUMINUM HANDLE F/ BR7	1	L