Parts Breakdown

MT2916B - LONG BARREL AIR HAMMER - BLUE

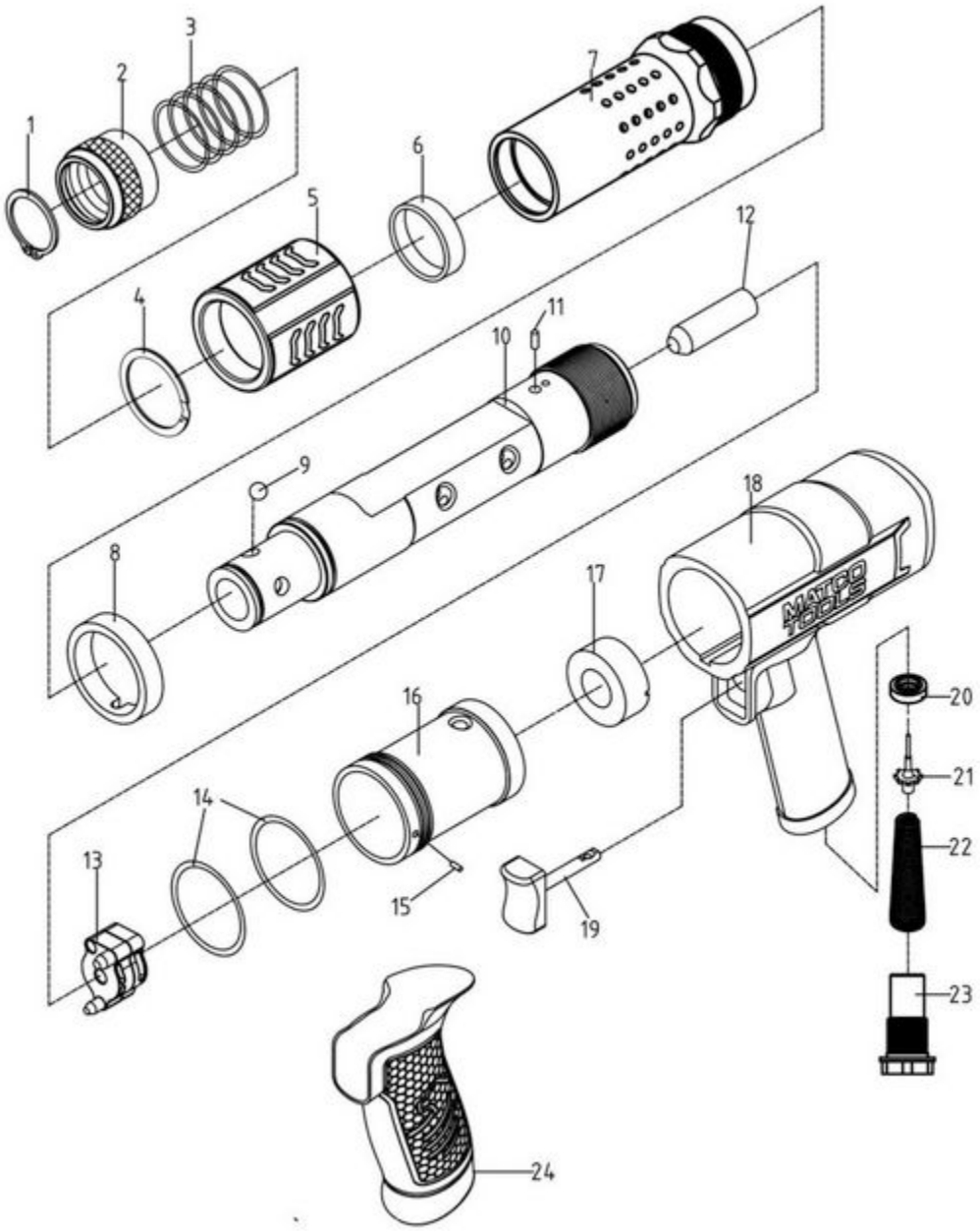

Item: MT2916B

Description: LONG BARREL AIR HAMMER - BLUE

Notes: N/S: RSMT2916WL; Warning Label; QTY 1. * RS1811RK Chisel Retainer Kit

Figure No	Part Number	Description	No. Reqd	Warranty Code
1	*K7*	SNAP RING [STW-29]	1	
2	*K7*	RETAINER COLLAR	1	
3	*K7*	SPRING	1	
4	K7RS22002	RETAINER RING F/MT2916	1	X
5	K7RS22005	FORWARD GRIP F/2916	1	X
6	K7RS22007	COLLAR F/MT2916	1	X
7	K7RS22008	EXHAUST DEFLECTOR	1	X
8	K7RS22009	RUBBER RING F/MT2916	1	X
9	*K7*	CHROME STEEL BALL [5/16]	1	
10	K7RS220010	CYLINDER F/MT2916	1	X
11	*K7RS220011	PIN	1	
12	*K7RS220012	PISTON	1	
13	K7RS220013	METAL VALVE BLOCK ASSEMBLY	1	X
14	K7RS220014	O-RING (42X2) F/ MT2916	2	X
15	K7RS220015	PIN FOR MT2916	1	X
16	K7RS220016	CYLINDER SLEEVE FOR MT2912	1	X
17	K7RS220017	RUBBER BUMPER	1	X
18	K7RS220018G	GREEN HOUSING F/MT2916G	1	X
18	K7RS220018O	HOUSING W/ #24 ORG F/MT2916	1	X
18	K7RS220018BL	HOUSING [W/ #24] - BLUE F/ MT2	1	X
18	K7RS220018BR	BURGUNDY HOUSING F/ MT2916	1	X
19	K7RS220019	TRIGGER BUTTON (RT22019) / LON	1	X
20	K7RS220020	THROTTLE SEAT F/MT2916	1	X
21	K7RS220021	THROTTLE SEAT F/MT2916	1	X
22	K7RS220022	SPRING F/MT2916	1	X
23	K7RS220023	AIR INLET F/MT2219	1	X
24	K7RS220024G	GREEN GRIP F/MT2916G	1	X
24	*K7RS220024BR	COMFORT GRIP - BURGUNDY [INCL W/ #18]	1	
24	*K7RS220024BL	COMFORT GRIP - BLUE [INCL W/ #18]	1	
24	*K7RS220024O	COMFORT GRIP - ORANGE [INCL W/ #18]	1	