MPM175DVI

OWNER'S MANUAL

11/2018

⚠ WARNING:

Read carefully and understand all **ASSEMBLY AND OPERATION INSTRUCTIONS** before operating. Failure to follow the safety rules and other basic safety precautions may result in serious personal injury.

18115445-12

MATCO TOOLS

EFFECTIVE APRIL 1, 2015

LIMITED WARRANTY

This warranty applies to the original purchaser and is subject to the terms and conditions listed below. This Limited Warranty is for new equipment sold after the above date, providing coverage for defects in material and workmanship at the time it is shipped from the factory.

Limited to the warranty periods below, MATCO TOOLS will repair or replace the item under warranty that fails due to defects in material and workmanship. MATCO TOOLS must be notified within 30 days of the failure, so as to provide instructions on how to proceed with the repair of your welder and warranty claim processing. Warranty period begins at the time the welder is purchased from an Authorized MATCO TOOLS distributor. **Keep your receipt as proof of purchase.**

Warranty Periods

Limited Warranty is divided into these categories. No Warranty, 1 year, 2 year and 3 year.

No Warranty

Normal wear items, MIG gun parts (contact tips, nozzle, contact tip adapter, MIG gun liner), drive roll, electrode holder, ground clamps, and plasma torch parts (nozzle, electrode, diffuser, cover) are considered consumable items and are not covered under warranty.

1 Year Accessories Warranty

Parts and Labor on MIG gun parts (except those listed under normal wear items), cables, regulator, and plasma torch (except those listed under normal wear items) are covered for 1 year. Any shipping related to warranty repair is the responsibility of the customer.

2 Year Welder Warranty

The 2 year warranty covers Parts and Labor on items such as: transformer, reactor, rectifier, solenoid valve, PC board, switches, controls, gas valve, drive motor, drive system other than drive roll and any other component that requires the removal of the sheet metal to access. Any shipping related to warranty repair is the responsibility of the customer.

Voiding Warranty

Warranty does not apply to: shipping damage, misuse and abuse of the unit and alteration of the unit in any way.

Warranty Claim

This is a Parts and Labor warranty. **Contact the MATCO TOOLS distributor you purchased the unit from**. Retain your receipt in the case a warranty claim is needed. No warranty will be provided without the original receipt from an authorized MATCO TOOLS distributor. To make a warranty claim, contact your MATCO TOOLS distributor. That MATCO TOOLS distributor will contact the customer service department for warranty instructions.

GENERAL SAFETY RULES

WARNING: Read and understand all instructions. Failure to follow all instructions listed below may result in serious injury or death.

CAUTION: Do not allow persons to operate or assemble this unit until they have read this manual and have developed a thorough understanding of how this unit works.

WARNING: The warnings, cautions, and instructions discussed in this instruction manual cannot cover all possible conditions or situations that could occur. It must be understood by the operator that common sense and caution are factors which cannot be built into this product, but must be supplied by the operator.

SAVE THESE INSTRUCTIONS

IMPORTANT SAFETY CONSIDERATIONS

1.1 Your Welding Environment

-Keep the environment you will be welding in free from flammable materials.
-Always keep a fire extinguisher accessible to your welding environment.
-Always have a qualified person install and operate this equipment.
-Make sure the area is clean, dry and ventilated. Do not operate the welder in humid, wet or poorly ventilated areas.
-Always have your welder maintained by a qualified technician in accordance with local, state and national codes.
-Always be aware of your work environment. Be sure to keep other people, especially children, away from you while welding.
-Keep harmful arc rays shielded from the view of others.
-Mount the welder on a secure bench or cart that will keep the welder secure and prevent it from tipping over or falling.

1.2 Your Welder's Condition

-Check ground cable, power cord and welding cable to be sure the insulation is not damaged. Always replace or repair damaged components before using the welder.
-Check all components to ensure they are clean and in good operating condition before use.

1.3 Use of Your Welder

⚠ CAUTION

Do not operate the welder if the output cable, electrode, torch, wire or wire feed system is wet. Do not immerse them in water. These components and the welder must be completely dry before attempting to use them.
-Follow the instructions in this manual.
-Keep welder in the off position when not in use.

-Connect ground lead as close to the area being welded as possible to ensure a good ground.
-Do not allow any body part to come in contact with the welding wire if you are in contact with the material being welded, ground or electrode from another welder.
-Do not weld if you are in an awkward position. Always have a secure stance while welding to prevent accidents. Wear a safety harness if working above ground.
-Do not drape cables over or around your body.
-Wear a full coverage helmet with appropriate shade (see ANSI Z87.1 safety standard) and safety glasses while welding.
-Wear proper gloves and protective clothing to prevent your skin from being exposed to hot metals, UV and IR rays.
-Do not overuse or overheat your welder. Allow proper cooling time between duty cycles.
-Keep hands and fingers away from moving parts and stay away from the drive rolls.
-Do not point MIG gun at any body part of yourself or anyone else.
-Always use this welder in the rated duty cycle to prevent excessive heat and failure.

1.4 Specific Areas of Danger, Caution or Warning

Electrical Shock

⚠WARNING

Electric arc welders can produce a shock that can cause injury or death. Touching electrically live parts can cause fatal shocks and severe burns. While welding, all metal components connected to the wire are electrically live. Poor ground connections are a hazard, so secure the ground lead before welding.
-Wear dry protective apparel: coat, shirt, gloves and insulated footwear.
-Insulate yourself from the work piece. Avoid contacting the work piece or ground.
- Do not attempt to repair or maintain the welder while the power is on.
-Inspect all cables and cords for any exposed wire and replace immediately if found.
-Use only recommended replacement cables and cords.
-Always attach ground clamp to the work piece or work table as close to the weld area as possible.
-Do not touch the welding wire and the ground or grounded work piece at the same time.
-Do not use a welder to thaw frozen pipes.

Fumes and Gases

⚠WARNING

-Fumes emitted from the welding process displace clean air and can result in injury or death.
-Do not breathe in fumes emitted by the welding process. Make sure your breathing air is clean and safe.
-Work only in a well-ventilated area or use a ventilation device to remove welding fumes from the environment where you will be working.
-Do not weld on coated materials (galvanized, cadmium plated or containing zinc, mercury or barium). They will emit harmful fumes that are dangerous to breathe. If necessary, use a ventilator/respirator with air supply or remove the coating from the material in the weld area.
-The fumes emitted from some metals when heated are extremely toxic. Refer to the material safety data sheet for the manufacturer's instructions.
-Do not weld near materials that will emit toxic fumes when heated. Vapors from cleaners, sprays and degreasers can be highly toxic when heated.

UV and IR Arc Rays

⚠ DANGER

The welding arc produces ultraviolet (UV) and infrared (IR) rays that can cause injury to your eyes and skin. Do not look at the welding arc without proper eye protection.

-Always use a helmet that covers your full face from the neck to top of head and to the back of each ear.

-Use a lens that meets ANSI standards and safety glasses. For welders under 160 amps output, use a shade 10 lens; for above 160 amps, use a shade 12. Refer to the ANSI standard Z87.1 for more information.

-Cover all bare skin areas exposed to the arc with protective clothing and shoes. Flame-retardant cloth or leather shirts, coats, pants or coveralls are available for protection.

-Use screens or other barriers to protect other people from the arc rays emitted from your welding.

-Warn people in your welding area when you are going to strike an arc so they can protect themselves.

Fire Hazards

⚠WARNING

Do not weld on containers or pipes that contain or have had flammable, gaseous or liquid combustibles in them. Welding creates sparks and heat that can ignite flammable and explosive materials.

-Do not operate an electric arc welder in areas where flammable or explosive materials are present.

-Remove all flammable materials within 35 feet of the welding arc. If removal is not possible, tightly cover them with fireproof covers.

-Take precautions to ensure that flying sparks do not cause fires or explosions in hidden areas, cracks or areas you cannot see.

-Keep a fire extinguisher close in the case of fire.

-Wear garments that are oil-free with no pockets or cuffs that will collect sparks.

-Do not have on your person any items that are combustible, such as lighters or matches.

-Keep work lead connected as close to the weld area as possible to prevent any unknown, unintended paths of electrical current from causing electrical shock and fire hazards.

-To prevent any unintended arcs, cut wire back to stick out ¼" after welding.

Hot Materials

⚠ CAUTION

Welded materials are hot and can cause severe burns if handled improperly.

-Do not touch welded materials with bare hands.

-Do not touch MIG gun nozzle after welding until it has had time to cool down.

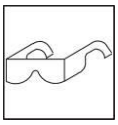

Sparks/Flying Debris

⚠ CAUTION

Welding creates hot sparks that can cause injury. Chipping slag off welds creates flying debris.

-Wear protective apparel at all times: ANSI-approved safety glasses or shield, welder's hat and ear plugs to keep sparks out of ears and hair.

Electromagnetic Field

⚠ CAUTION

-Electromagnetic fields can interfere with various electrical and electronic devices such as pacemakers.

-Consult your doctor before using any electric arc welder or cutting device.

-Keep people with pacemakers away from your welding area when welding.

-Do not wrap cable around your body while welding.

-Wrap MIG gun and ground cable together whenever possible.

-Keep MIG gun and ground cables on the same side of your body.

Shielding Gas Cylinders Can Explode

⚠WARNING

High pressure cylinders can explode if damaged, so treat them carefully.

-Never expose cylinders to high heat, sparks, open flames, mechanical shocks or arcs.

-Do not touch cylinder with MIG gun.

-Do not weld on the cylinder.

-Always secure cylinder upright to a cart or stationary object.

-Keep cylinders away from welding or electrical circuits.

-Use the proper regulators, gas hose and fittings for the specific application.

-Do not look into the valve when opening it.

-Use protective cylinder cap whenever possible.

1.5 Proper Care, Maintenance and Repair

⚠ DANGER

-Always have power disconnected when working on internal components.

- Do not touch or handle PC board without being properly grounded with a wrist strap. Put PC board in static proof bag to move or ship.

-Do not put hands or fingers near moving parts such as drive rolls or fan**.**

⚠WARNING

Breathing welding fumes exposes you to chemicals, including chromium (hexavalent compounds), known to the State of California to cause cancer and birth defects or other reproductive harm. *Always weld in a well-ventilated area.* If in an enclosed area, vent the exhaust to the outside. For more information go to www.P65warings.ca.gov

⚠WARNING

This product can expose you to chemicals including Lead, which is known to the State of California to cause cancer and birth defects or other reproductive harm. For more information go to www.P65warings.ca.gov

USE AND CARE

- **Do not modify this unit in any way.** Unauthorized modification may impair the function and/or safety and could affect the life of the equipment. There are specific applications for which this unit was designed.
- **Always check for damaged or worn out parts before using this unit.** Broken parts will affect the operation. Replace or repair damaged or worn parts immediately.
- **Store idle.** When this unit is not in use, store it in a secure place out of the reach of children. Inspect it for good working condition prior to storage and before re-use.

TECHNICAL SPECIFICATIONS

Item	Description
Power Supply	120V, 20A, 60 HZ, Single Phase
	230V, 28A, 60 HZ, Single Phase
No-Load Voltage	54 Volts DC
Output Range	30 - 90 Amp DC With 120V Input Power
	30 - 160 Amp DC With 230V Input Power
Duty Cycle	40% @ 90A With 120V Input Power
	20% @ 160A With 230V Input Power
Suggested MIG Wire	Steel, Stainless Steel, Aluminum
Wire Diameter	.023, .030,.035
Dimensions	22-1/2" x 11-3/4" x 14.1/2"
Weight	26-1/2 lbs.

DESCRIPTION

The Matco Tools MPM175DVI is a Dual Voltage, portable DC wire feed welder capable of welding with solid wire (with shielding gas) or flux core wire. This unit is capable of welding 5/16” steel in a single pass when operating on 230V power. Use the included 120V adapter cord to run this unit off 120V AC power with a single pass capacity of 3/16”. It uses leading edge Inverter Technology to provide high quality welds that are crisp, clean, and consistent with plenty of power and will impress the most experienced of welders. It features infinite wire feed speed control and voltage control, giving you total control to tune in the arc you want. The MPM175DVI also features a cooling fan and thermal overload protection to help protect your investment. The Inverter Technology is evident from the moment you take this unit out of the box. One of the many advantages of inverter technology is creating more welding power from a smaller transformer. A smaller transformer means lower overall weight. The MPM175DVI is ideal for use when welding materials from 24 gauge to 5/16” and is ideal for the home hobbyist, auto repair, farm and ranch and light industrial applications.

POWER INDICATOR LIGHT

In the “OFF” position no power is being supplied to the torch. In the “ON” position power is supplied to the main transformer and control circuit.

PROTECTION INDICATOR LIGHT

If the duty cycle of the welder is exceeded, the internal temperature will exceed safe temperatures and the machine will shut down. The thermal overload light will come on indicating this. Leave the unit on and allow 15 minutes for cool down before the light will go off and the temperature to fall into an allowable operating range.

WIRE FEED SPEED CONTROL

Adjustment of the wire feed speed. Refer to the "set up" chart inside the wire feed compartment for initial adjustment settings.

WELDING VOLTAGE CONTROL

The voltage control is on the front panel of machine. Refer to the “set up” chart inside the wire feed compartment for initial adjustment settings.

GROUND CABLE AND CLAMP

The ground cable and clamp are attached to the work piece to complete the circuit allowing the flow of current needed to weld.

MIG TORCH

The welding wire is driven through the welding cable and torch to the work piece. It is attached to the drive system. The trigger activates the drive motor.

INERT GAS REGULATOR AND HOSE

The Inert Gas Regulator installs on the shielding gas cylinder for MIG welding with solid wires. The regulator controls the compressed gas and allows you to adjust the flow rate of the gas. The gas hose connects to the regulator/flow gauge and delivers the shielding gas from the shielding gas bottle to the welder.

FLUX CORE NOZZLE AND CONTACT TIPS

The flux core nozzle is used during flux core welding. It protects the contact tip adapter from spatter and debris during the flux core welding process. The extra contact tips are **Tweco® 11-30 style tips used when using .030 welding wire.

POWER CORD AND PLUG

Plug this unit into a 230V, 50 amp circuit breaker power supply when operating on 230V. If running on 120V power using the supplied 120V power cord adapter, plug this unit into a 120V, 20 amp circuit breaker power supply.

**Tweco is a registered trademark of Victor Technologies International, Inc.

INSTALLATION

Electrical Shock

⚠WARNING

- ***High voltage danger from power source! Consult a qualified electrician for proper installation of receptacle. This welder must be grounded while in use to protect the operator from electrical shock.***

- ***Do not remove grounding prong or alter the plug in any way. Use only the supplied adapter between the plasma cutter's power cord and the power source receptacle. Make sure the POWER switch is OFF when connecting your welder's power cord directly to a properly grounded 230 VAC, 60 HZ, Single Phase, 50 Amp input power supply. Or, when using the supplied 120V adapter, connect the 120V Adapter to a properly grounded 120V, 20 Amp input power supply.***

1. POWER REQUIREMENT 230V - AC single phase 230V (200-240V) 50/60 HZ fused with a 50 amp time delayed fuse or circuit breaker is required. DO NOT OPERATE THIS UNIT if the ACTUAL power source voltage is less than 215 volts AC or greater than 240 volts AC.

2. POWER REQUIREMENT 120V - AC single phase 120V (110-130V) 50/60 HZ fused with a 20 amp time delayed fuse or circuit breaker is required. DO NOT OPERATE THIS UNIT if the ACTUAL power source voltage is less than 110 volts AC or greater than 130 volts AC.

    a. When connecting this unit to 120V power, connect the 120V adapter cord to the power cord pigtail that is attached to the machine.

3. EXTENSION CORD - We do not recommend an extension cord because of the voltage drop they produce. This drop in voltage can affect the performance of the welder. If you need to use an extension cord, we recommend you check with a qualified electrician and your local electrical codes for your specific area. Do not use an extension cord over 25 ft. in length.
4. INSTALL THE WIRE ROLLER - The wire roller has been factory installed. However, check to make certain the correct wire groove is in place to accommodate the size of wire you are using. Open the wire feed compartment. Adjust the drive roller according to the following steps, see following picture about the wire feeder structure:
    a. Open the door to the welder drive compartment
    b. Remove the drive tension by loosening the drive tension adjusting knob (1) and lifting the Drive Tension Adjustor away from the Drive Tension Arm (2). Lift the Drive Tension Arm away from the Drive Roller (3).
    c. If there is wire already installed in the welder, roll it back onto the wire spool by hand-turning the spool clockwise. Be careful not to allow all the wire to come out of the rear end of the inlet guide tube without holding onto it or the wire spool will unspool itself. Put the end of the wire into the hole on the outside edge of the wire spool and bend it over to hold the wire in place. Remove the spool of wire from the drive compartment of the welder.
    d. Rotate the Drive Roller Cap (3) counterclockwise and remove it from the Drive Roller.
    e. Pull the Drive Roller off of the Drive Roller shaft.
    f. Based on the wire diameter select the correct groove. When installing the drive roller, the number stamped on the drive roller for the wire size you are using should be facing you. Push the Drive Roller onto the Drive Roller Shaft.

g. Reinstall the Drive Roller Cap and lock in place by turning it clockwise.
h. Close the door to the welder drive compartment.

5. INSTALL THE WIRE
   a. Select welding wire - We recommend the usage of .030 Wire on this unit. However, .023 - .035 wire may be used. Both four-inch and eight-inch wire spools can be used on this welder.

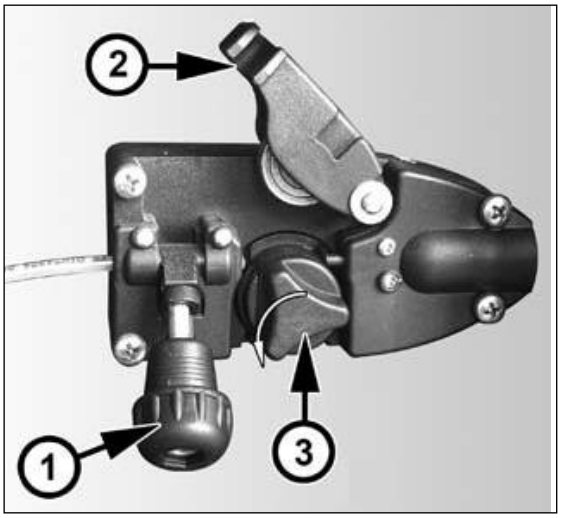

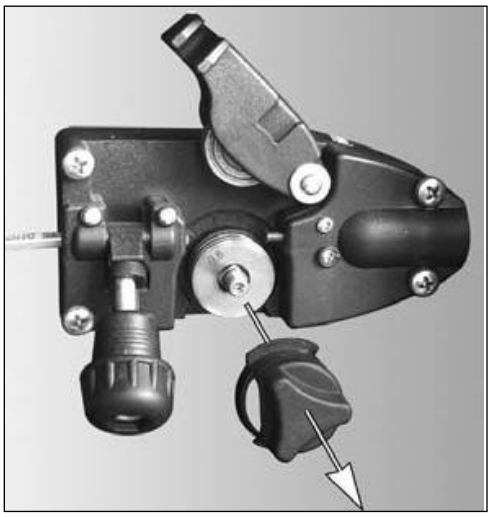

NOTE:
- Metal thinner than 24 gauge cannot be welded with this machine. Attempting to do so will cause burn through in the metal you are intending to weld.
- Do not use rusty wire. Remove any wire that is rusty. If the whole spool is rusty, discard it and use another roll.

6. Installing the wire

Electrical Shock

⚠WARNING

- **Electric shock can kill! Always turn the POWER switch OFF and unplug the power cord from the AC power source before installing wire.**

NOTE:
- Before installing, make sure that you have removed any old wire from the torch assembly. This will help to prevent the possibility of the wire jamming inside the gun liner.
- Be very careful when removing the welding nozzle. The contact tip on this welder is live whenever the torch trigger is pulled. Make certain POWER is turned OFF.

   a. Remove the nozzle and contact tip from the end of the torch assembly.

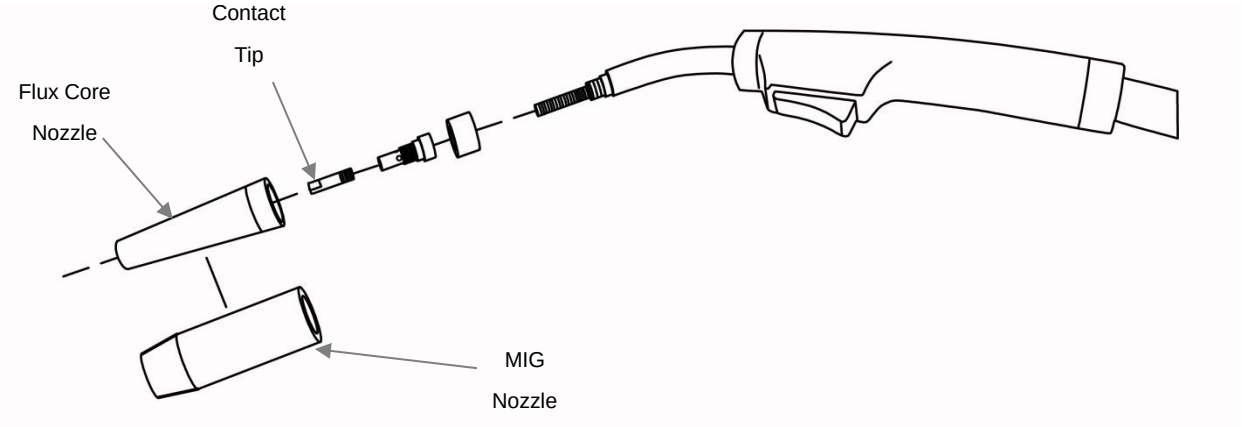

b. Make sure the proper groove on the drive roller is in place for the wire installed. If not, change the drive roller as described in Section 4 above.

c. Remove the packaging from the spool of wire and then identify the leading end of the wire secured on the edge of the spool. DO NOT UNHOOK IT AT THIS TIME.

d. Place the spool on the spool hub so the wire will pull off the bottom of the spool. The welding wire should always come off the bottom of the spool into the drive mechanism. See following figure.

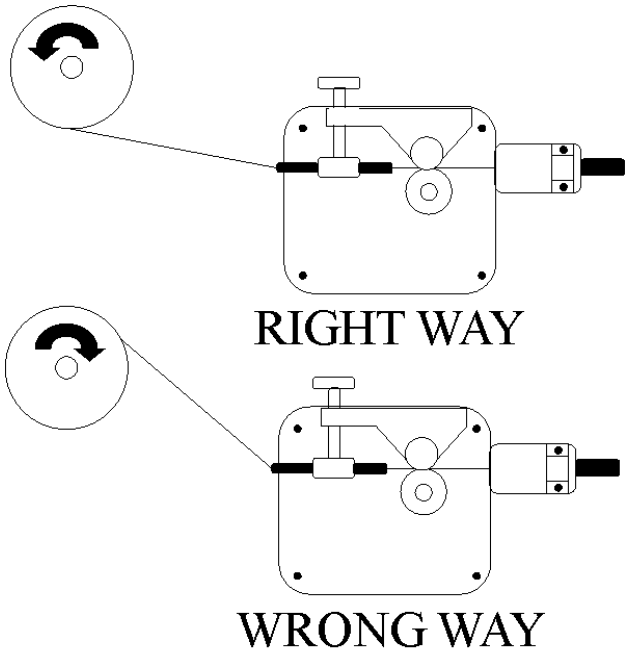

e. The welder can use either 4 inch or 8 inch spools. See the following figure for additional reference. The wing nut controls the tension on the spool.

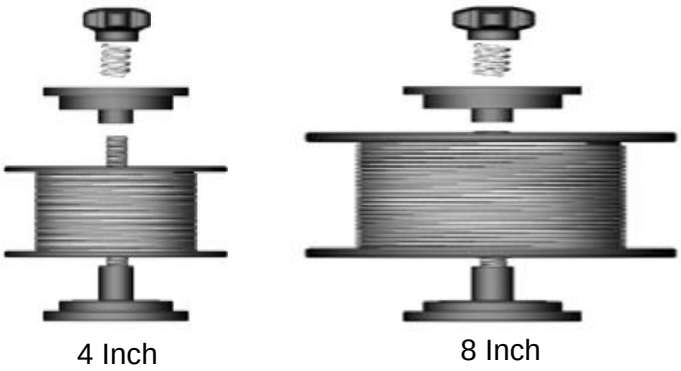

f. Setting the wire spool tension. a) Turn the spool of wire with one hand. b) Increase the spool tension by tightening (turn clockwise) the wing nut while turning the spool. Turn the spool while tightening the wing nut until the spool slows down and you feel a slight drag. Stop tightening the wing nut; you may need to repeat these steps until proper spool tension is achieved.

NOTE:

- If TOO MUCH tension is applied to the wire spool, the wire will slip on the drive roller or will not be able to feed at all. If TOO LITTLE tension is applied, the spool of wire will want to unspool itself when the trigger is released. Readjust the spool tension using the wing nut as necessary to correct for either problem.

g. With the welder disconnected from the power source, remove the leading end of the wire from the spool. **Hold on to it securely**, so as not to allow unspooling or tangling of the wire as it will result in tangled wire and feeding problems.
h. Cut off any bent portion of the wire using a wire cutter.
i. Loosen the tension adjusting knob holding the drive tension arm in place and lift the tension arm up off the drive roller.
j. Insert the wire into the inlet guide tube; feed it across the drive roller and into the torch assembly about six inches.

⚠ CAUTION

-Make certain that the welding wire is actually going into the torch liner. If not, the wire will jam up in the mechanism.

k. Line the wire up with the correct groove in the drive roller. Place the drive tension arm back above the drive roller.
l. Place the drive tension adjustment arm back in place.
m. Tighten (turn clockwise) the drive tension adjusting knob until the tension roller is applying enough force on the wire to prevent it from slipping in the drive rollers. DO NOT OVER TIGHTEN.
n. NOW YOU CAN LET GO OF THE WIRE.
o. Plug in the welder power cord and turn the welder ON. Set the Voltage switch to the voltage setting recommended for the gauge metal that is to be welded. Refer to the set-up chart on the back side of the drive compartment door.

⚠ CAUTION

-The welding wire is electrically hot when the power is on and the torch trigger is activated.

p. Set the WIRE SPEED control to the middle of the wire speed range.
q. Straighten the MIG torch cable and pull the trigger in the gun handle to feed the wire through the torch assembly. When at least one inch of the wire sticks out past the end of the torch, release the trigger.
r. Turn the Power Switch to the OFF position.
s. Select a contact tip stamped with the same diameter as the wire being used.

NOTE:

- Due to inherent variances in flux cored welding wire, it may be necessary to use a contact tip one size larger when welding with flux core wire if wire jams occur.

t. Slide the contact tip over the wire (protruding from the end of the torch). Thread the contact tip into the end of the torch and hand-tighten securely.
u. Install the nozzle on the torch assembly.
v. Cut off excess wire that extends past the end of the nozzle more than 1/4 inch.
w. Turn the welder ON.

7. SETTING THE DRIVE ROLL TENSION

⚠ WARNING

- **Arc flash can injure eyes! To reduce the risk of arc flash, make certain that the wire coming out of the end of the torch does not come in contact with the work piece, ground clamp, or any grounded material during the drive tension setting process or arcing will occur.**

a. Press the trigger on the torch.
b. Turn the drive tension adjustment knob clockwise until the wire seems to feed smoothly without slipping.

8. GAS INSTALLATION

⚠ WARNING

Shielding gas cylinders and high pressure cylinders can explode if damaged, so treat them carefully.

- **Never expose cylinders to high heat, sparks, open flames, mechanical shocks or arcs.**
- **Do not weld on the cylinder.**
- **Always secure cylinder upright to a cart or stationary object.**
- **Keep cylinders away from welding or electrical circuits.**
- **Use the proper regulators, gas hose and fittings for the specific application.**

a. Polarity Changing - When MIG wire is used, shielding gas is required and the polarity on this unit needs to be electrode positive.
b. Electrode Positive for MIG Welding - The Weld Power Cable should be connected to the positive (+) weld output connection on the front of the machine. The ground cable would then be connected to the negative (-) weld output connection.
c. Electrode Negative for Flux Core Welding - The Weld Power Cable should be connected to the negative (-) weld output connection on the front of the machine. The ground cable would then be connected to the positive (+) weld output connection. Refer to the polarity setting label inside the wire compartment.

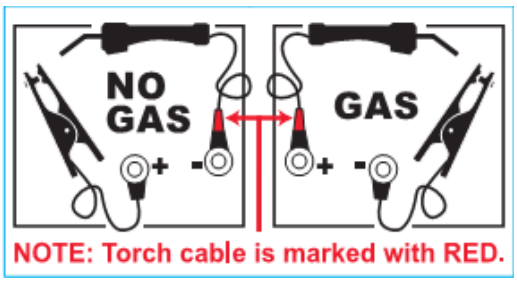

d. Connect one end of the gas hose to the gas hose connection on the back of the welder.
e. Connect the other end of the gas hose to the gas hose connection on the supplied regulator/flow gauge.
f. Before installing the regulator, it is good practice to make certain no debris is in the gas bottle connection. Rotate the bottle so the gas connection is not pointing toward you or any other person. Turn the valve on the gas bottle clockwise and quickly close. This quick thrust of gas will clear any debris in the connection. Connect the regulator to the gas bottle connection. Use a wrench to snug up the connection.

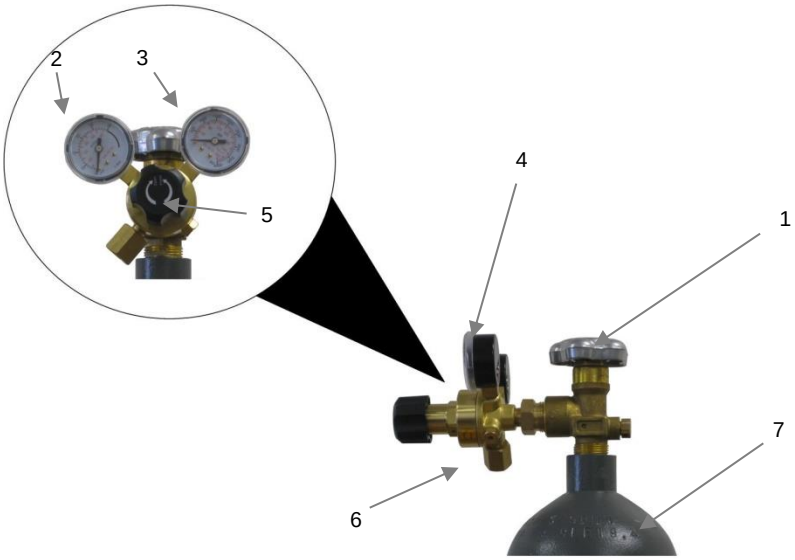

(1) Gas Bottle Valve
(2) Gas Flow Gauge (Set at 20 CFH)
(3) Gas Pressure Gauge
(4) Regulator
(5) Gas Flow Adjuster
(6) Gas Hose Connection
(7) Gas Cylinder

g. Open the Gas Bottle Valve on the cylinder of gas.
h. Turn the Gas Flow Adjuster on the regulator so that the gas flow rate is set at approximately 20 CFH. Make certain you are reading the correct scale on the gauge.

NOTE: Slowly open the cylinder valve by turning it counterclockwise until the cylinder pressure gauge registers on the first gauge of the regulator. Turn the adjustment knob clockwise (right) slowly to increase gas flow to 20 CFH. To reduce the gas flow, turn the adjustment counterclockwise (left). The gas valve is located on the back panel of the welder and activated by the trigger. Gas flow

should be heard when the trigger is activated. No gas flow will result in a harsh arc with excessive spatter, a smooth weld bead will be difficult to obtain. Avoid unnecessary gas loss by closing the tank valve when finished welding.

6.7 Gas selection

Different materials require different shielding gas when MIG welding, refer to the set up chart inside the wire feed compartment.

Mild steel: Use 75% Argon and 25% CO_2 for reduced spatter and reduced penetration for thinner materials. Do NOT USE Argon gas concentrations higher than 75% on steel. The result will be extremely poor penetration, porosity, and brittleness of weld.

Mild Steel: Use CO_2 for deeper penetration but increased spatter. (A CO_2 regulator adapter will be needed)

Stainless steel: Use a mixed gas consisting of Helium, Argon and CO_2.

Aluminum or bronze: Use 100% Argon.

MIG OPERATION

⚠WARNING

- ***High voltage danger from power source! Consult a qualified electrician for proper installation of receptacle. This welder must be grounded while in use to protect the operator from electrical shock.***
- ***Do not remove grounding prong or alter the plug in any way. Use only the supplied adapter between the plasma cutter's power cord and the power source receptacle. Make sure the POWER switch is OFF when connecting your welder's power cord directly to a properly grounded 230 VAC, 60 HZ, Single Phase, 50 Amp input power supply. Or, when using the supplied 120V adapter, connect the 120V Adapter to a properly grounded 120V, 20 Amp input power supply.***

1. POWER SWITCH

The power switch supplies electrical current to the welder. Whenever the power switch is in the ON position, the welding circuit is activated. ALWAYS turn the power switch to the OFF position and unplug the welder before performing any maintenance.

2. VOLTAGE SELECTOR

The voltage selector controls the welding voltage/heat. This unit has a voltage control that is infinitely adjustable within its range. Refer to the label inside the welder side door for recommended voltage selector settings for your welding job.

3. WIRE SPEED CONTROL

The wire speed control adjusts the speed at which the wire is fed out of the welding torch. The wire speed needs to be closely matched (tuned-in) to the rate at which it is being melted off. Some things that affect wire speed selection are the type and diameter of the wire being used, the heat setting selected, and the welding position being used. Refer to the label inside the welder side door for recommended wire speed settings for your welding job.

NOTE: The wire will feed faster without an arc. When an arc is being drawn, the wire speed will slow down.

4. HOLDING THE TORCH

The best way to hold the welding torch is the way it feels most comfortable to you. While practicing with your new welder, experiment by holding the torch in different positions until you find the one that seems to work best for you.

5. POSITION OF THE TORCH TO THE WORK PIECE

There are two angles of the torch nozzle in relation to the work piece that must be considered when welding.

5.1. Angle can vary, but in most cases the optimum angle will be 60 degrees, the point at which the torch angle is parallel to the work piece. If angle A is increased, penetration will increase. If angle A is decreased, penetration will decrease also.

5.2. Angle B can be varied for two reasons: to improve the availability to see the arc in relation to the weld puddle and to direct the force of the arc.

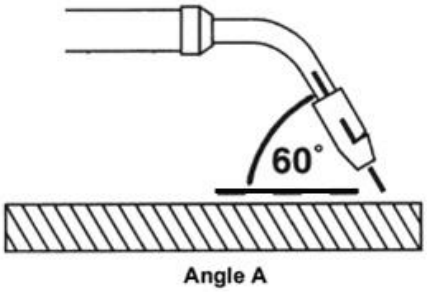

Angle A

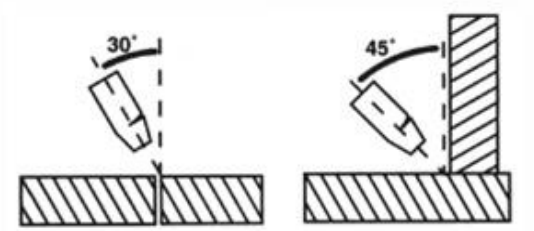

Angle B

6. DISTANCE FROM THE WORK PIECE - If the nozzle is held off the work piece, the distance between the nozzle and the work piece should be kept constant and should not exceed 1/4 inch or the arc may begin sputtering, signaling a loss in welding performance.

7. TUNING IN THE WIRE SPEED - This is one of the most important parts of wire welder operation and must be done before starting each welding job or whenever the voltage setting or wire diameter is changed.

⚠WARNING

EXPOSURE TO A WELDING ARC IS EXTREMELY HARMFUL TO THE EYES AND SKIN! Prolonged exposure to the welding arc can cause blindness and burns. Never strike an arc or begin welding until you are adequately protected. Wear flame-proof welding gloves, a heavy long sleeved shirt, trousers without cuffs, high topped shoes, and an ANSI approved welding helmet.

7.1 Connect the Ground Clamp to a scrap piece of the same type of material which you will be welding. It should be equal to or greater than the thickness of the actual work piece, and free of oil, paint, rust, etc.

7.2 Select a heat setting.

7.3 Hold the torch in one hand. Hold the wire just off the work piece. (See HOLDING THE TORCH section if you are uncertain of the angle at which you will be welding.)

7.4 Set the wire feed speed based on the thickness of material and the set-up chart on the back side of the wire feeder door.

7.5 Lower your welding helmet. Pull the trigger on the torch and let the wire feed into the work piece to start an arc. Then begin to drag the torch toward you.

7.6 LISTEN! If the arc is sputtering, increase the wire speed slightly and try again. Continue increasing the wire speed adjustment until you achieve a smooth buzzing sound. If the wire seems to "pound" into the work piece, decrease wire speed slightly and try again. Use the wire speed control to slightly increase or decrease the heat and penetration for a given voltage setting by increasing or decreasing the wire speed slightly. Repeat this tune-in procedure if you select a new voltage setting, a different wire diameter, or a different roll of wire.

8. WELDING TECHNIQUES

⚠WARNING

EXPOSURE TO A WELDING ARC IS EXTREMELY HARMFUL TO THE EYES AND SKIN! Prolonged exposure to the welding arc can cause blindness and burns. Never strike an arc or begin welding until you are adequately protected. Wear flame-proof welding gloves, a heavy long sleeved shirt, trousers without cuffs, high topped shoes, and an ANSI approved welding helmet.

⚠WARNING

ELECTRIC SHOCK CAN CAUSE INJURY OR DEATH! To prevent ELECTRIC SHOCK, do not perform any welding while standing, kneeling, or lying directly on the grounded workpiece.

8.1 Moving the torch

Torch travel refers to the movement of the torch along the weld joint and is broken into two elements: Direction and Speed. A solid weld bead requires that the welding torch be moved steadily and at the right speed along the weld joint. Moving the torch too fast, too slow, or erratically will prevent proper fusion or create a lumpy, uneven bead.

Travel direction is the direction the torch is moved along the weld joint in relation to the weld puddle. The torch is either PUSHED into the weld puddle or PULLED away from the weld puddle.

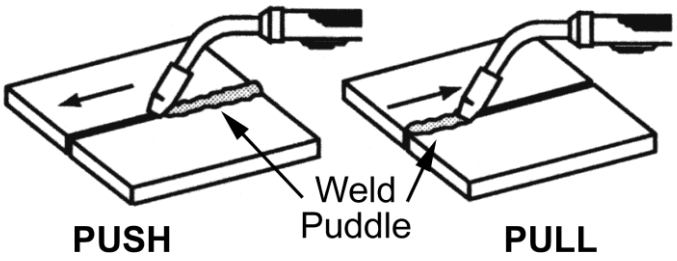

For most welding jobs you will pull the torch along the weld joint to take advantage of the greater weld puddle visibility.

Travel speed is the rate at which the torch is being pushed or pulled along the weld joint. For a fixed heat setting, the faster the travel speed, the lower the penetration and the lower and narrower the finished weld bead, likewise, the slower the travel speed, the deeper the penetration and the higher and wider the finished weld bead. As a good rule of thumb, the thickness of a cross-section of the weld bead should be approximately the same thickness as the thinnest material you are welding.

8.2 Types of welding beads

As you become more familiar with your new welder and better at laying some simple weld beads, you can begin to try some different weld bead types.

The STRINGER BEAD is formed by traveling with the torch in a straight line while keeping the wire and nozzle centered over the weld joint. See following figure.

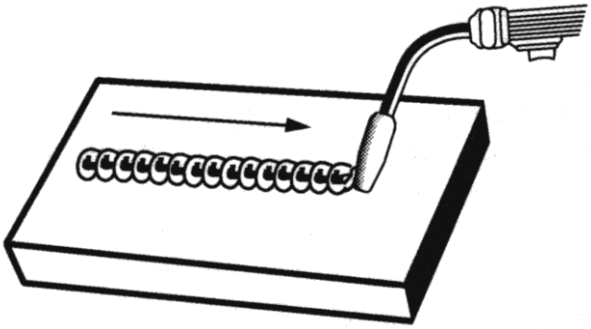

The WEAVE BEAD used when you want to deposit metal over a wider space than would be possible with a stringer bead. It is made by weaving from side to side while moving with the torch. It is best to hesitate momentarily at each side before weaving back the other way.

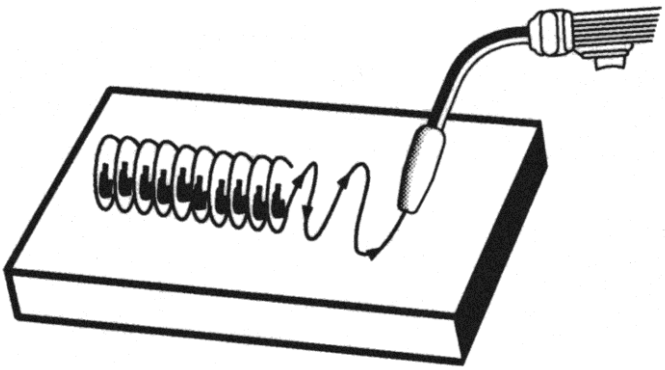

8.3 Welding position

FLAT POSITION is easiest of the welding positions and is most commonly used. It is best if you can weld in the flat position if at all possible as good results are easier to achieve.

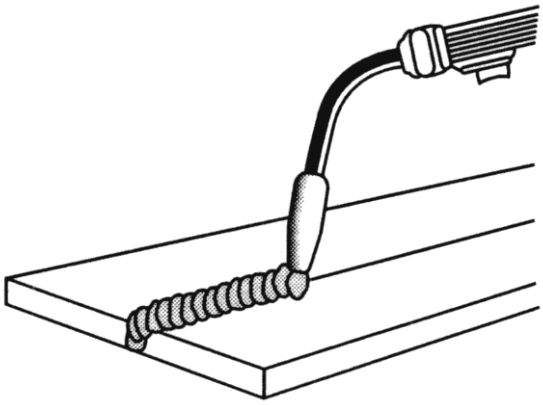

HORIZONTAL POSITION is performed very similarly to the flat weld except that angle B (see HOLDING THE TORCH) is such that the wire, directed more toward the metal above the weld joint is to help prevent the weld puddle from running downward while still allowing slow enough travel speed. A good starting point for angle B is about 30 degrees DOWN from being perpendicular to the work piece.

VERTICAL POSITION it is easier for many people to pull the torch from top to bottom. It can be difficult to prevent the puddle from running downward. Pushing the torch from bottom to top may provide better puddle control and allow slower rates of travel speed to achieve deeper penetration. When vertical welding, angle B (see HOLDING THE TORCH) is usually always kept at zero, but angle A will generally range from 45 to 60 degrees to provide better puddle control.

OVERHEAD POSITION is the most difficult welding position. Angle A (see HOLDING THE TORCH) should be maintained at 60 degrees. Maintaining this angle will reduce the chances of molten metal falling into the nozzle. Angle B should be held at zero degrees so that the wire is aiming directly into the weld joint. If you experience excessive dripping of the weld puddle, select a lower heat setting. Also, the weave bead tends to work better than the stringer.

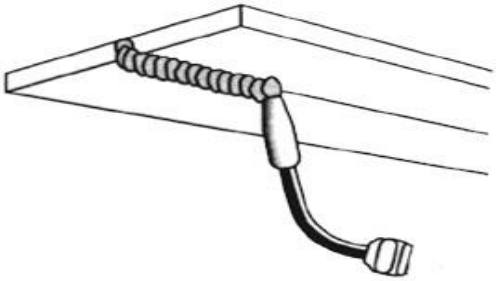

8.4 Multiple pass welding

Butt Weld Joints: When butt welding thicker materials; you will need to prepare the edges of the material to be joined by grinding a bevel on the edge of one or both pieces of the metal being joined. When this is done, a "**V"** is created between the two pieces of metal that will have to be welded closed. In most cases, more than one pass or bead will need to be laid into the joint to close the "**V**."

Laying more than one bead into the same weld joint is known as a multiple-pass weld.

The illustrations in following figure show the sequence for laying multiple pass beads into a single "V" butt joint.

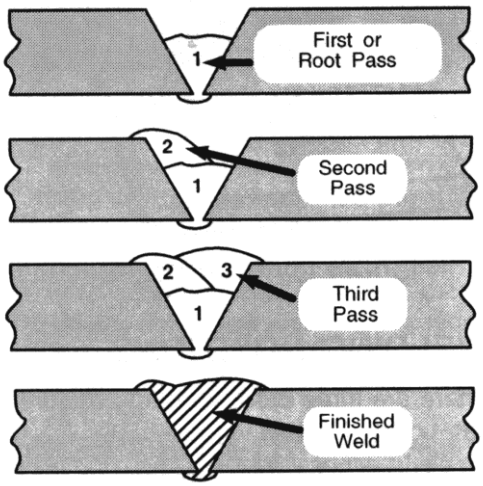

NOTE:

WHEN USING SELF-SHIELDING FLUX-CORE WIRE it is very important to thoroughly chip and brush the slag off each completed weld bead before making another pass or the next pass will be of poor quality.

Fillet Weld Joints. Most fillet weld joints, on metals of moderate to heavy thickness, will require multiple pass welds to produce a strong joint. The following figure will show the sequence of laying multiple pass beads into a T fillet joint and a lap fillet joint.

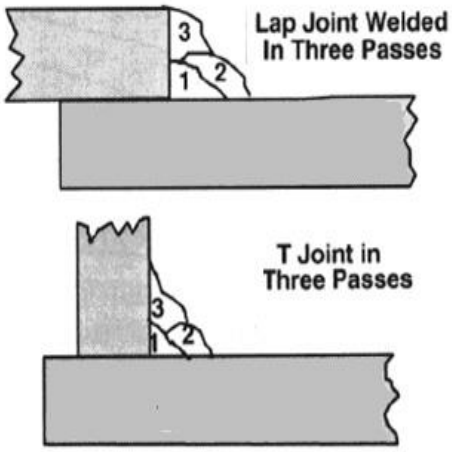

8.5 Spot welding

There are three methods of spot welding: Burn-Through, Punch and Fill, and Lap. Each has advantages and disadvantages depending on the specific application as well as personal preference.

1. The BURN-THROUGH METHOD welds two overlapped pieces of metal together by burning through the top piece and into the bottom piece. With the burn-through method, larger wire diameters tend to work better than smaller diameters. Wire diameters that tend to work best, with the burn-through method are 0.035 inch self-shielding flux-core wire. Do not use 0.030 inch self-shielding flux core wires when using the burn-through method unless the metal is VERY thin or excessive filler metal build-up and minimal penetration is acceptable. Always select the HIGH heat setting with the burn-through method and tune in the wire speed prior to making a spot weld.
2. The PUNCH AND FILL METHOD produces a weld with the most finished appearance of the three spot weld methods. In this method, a hole is punched or drilled into the top piece of metal and the arc is directed through the hole to penetrate into the bottom piece. The puddle is allowed to fill up the hole leaving a spot weld that is smooth and flush with the surface of the top piece. Select the wire diameter, heat setting, and tune in the wire speed as if you were welding the same thickness material with a continuous bead.
3. The LAP SPOT METHOD directs the welding arc to penetrate the bottom and top pieces, at the same time, right along each side of the lap joint seam. Select the wire diameter, heat setting, and tune in the wire speed as if you were welding the same thickness material with a continuous bead.

8.6 SPOT WELDING INSTRUCTIONS

1. Select the wire diameter and heat setting recommended above for the method of spot welding you intend to use.
2. Tune in the wire speed as if you were going to make a continuous weld.
3. Hold the nozzle piece completely perpendicular to and about 1/4 inch off the work piece.
4. Pull the trigger on the torch and release it when it appears that the desired penetration has been achieved.
5. Make practice spot welds on scrap metal, varying the length of time you hold the trigger, until a desired spot weld is made.
6. Make spot welds on the actual work piece at desired locations.

MAINTENANCE

- **Maintain your welder.** It is recommended that the general condition of any welder be examined before it is used. Keep your welder in good repair by adopting a program of conscientious repair and maintenance. Have necessary repairs made by qualified service personnel.
- Periodically clean dust, dirt, grease, etc. from your welder.
- Every six months, or as necessary, remove the cover panel from the welder and air-blow any dust and dirt that may have accumulated inside the welder.
- Replace power cord, ground cable, ground clamp, or electrode assembly when damaged or worn.

TROUBLESHOOTING

SYMPTOM	POSSIBLE CAUSE	CORRECTIVE ACTION
Unit does not power up	Unit is not plugged in	Plug in unit
	Input power circuit breaker not on	Reset input power circuit breaker
	The Main Power Switch Is Not Working	Replace Main Power Switch
Wire Drive Motor does not turn	Loose or bad fuse	Locate the Fuse Holder inside the wire compartment. Tighten fuse or replace.
	Wire Feed Speed Control at zero	Increase Wire Feed Speed Control
	Trigger is not mashed	Wire will feed only when trigger is mashed
	Wire Drive Motor Is damaged	Replace Wire Drive Motor
Overload Indicator is on	Input Voltage is too high or too low	Meter Input Power Voltage. This unit must be used with input voltage that ranges from 220V-240V AC (105V-132V when operating using the 120V adapter cord).
	Welder is overheated	Leave the power on. Allow the fan to cool the welder until the overload indicator light is off.
Wire Feeds Inconsistently	Torch Liner is plugged	Clear or replace torch liner
	Wire Diameter may vary on spool of wire causing the wire to catch in the contact tip.	Increase the contact tip one size.
	Too Much or Too Little Wire Tension	See Installing The Wire Section
	Too Much or Too Little Drive Roll Tension	See Setting Drive Roll Tension Section
	Drive Roll is Worn	Replace Drive Roll
Can Not Create An Arc	Work Piece is Painted Or Rusty	Remove All Paint And Rust
	Ground Clamp Is Connected Where There Is Paint Or Rust	Remove All Paint And Rust So Ground Clamp Is Connected To Bare Metal
	Ground Clamp Is Not Electrically Connected To The Work Piece	Make Certain The Ground Clamp Is Connected To The Work Piece
	Trigger Is Not Pressed	This Unit Is Not Electrically Hot Until You Press The Torch Trigger
For Assistance, call 855-920-2399		

MAIN CIRCUIT CHART

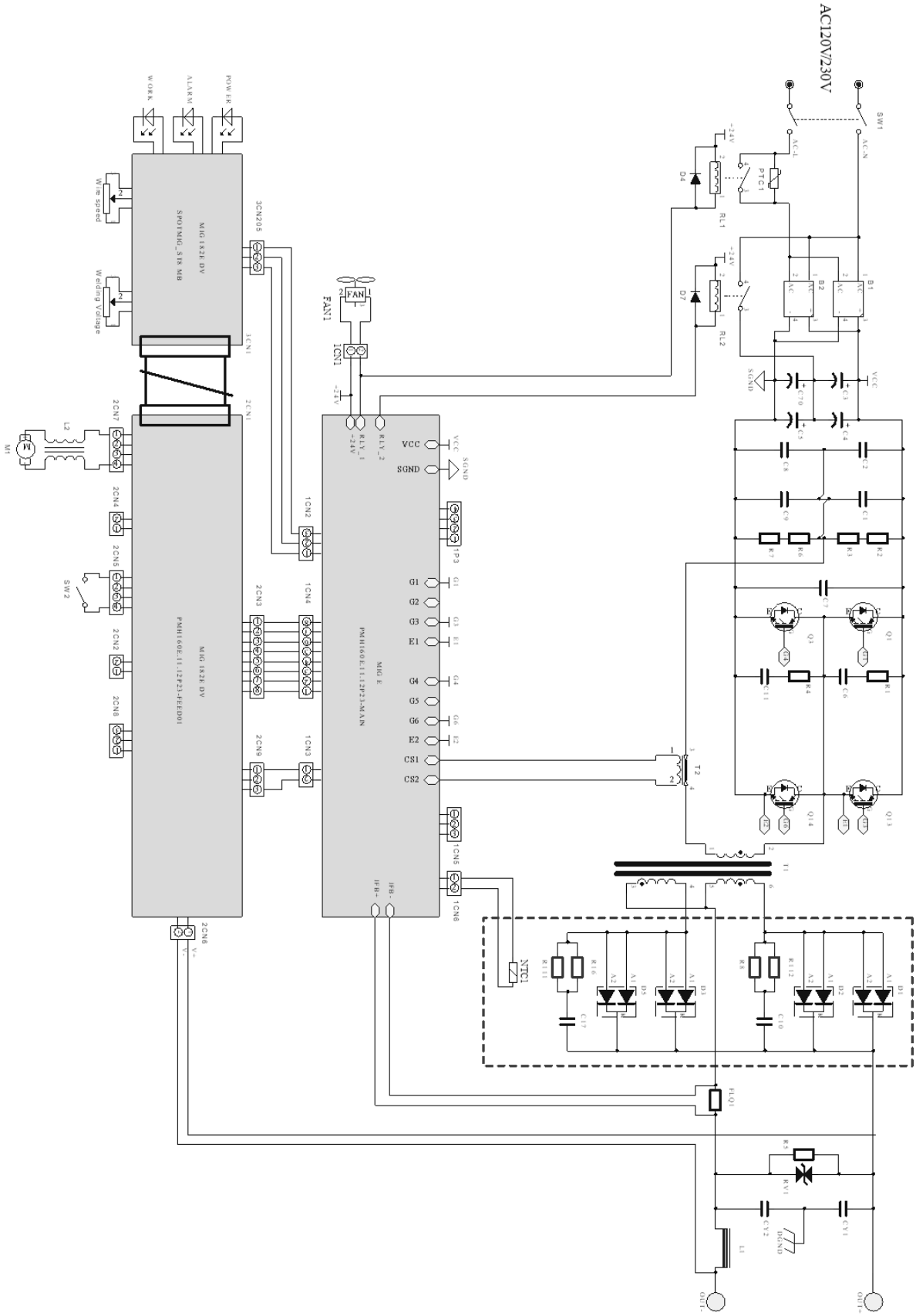

18115445-12

SPARE PARTS LIST

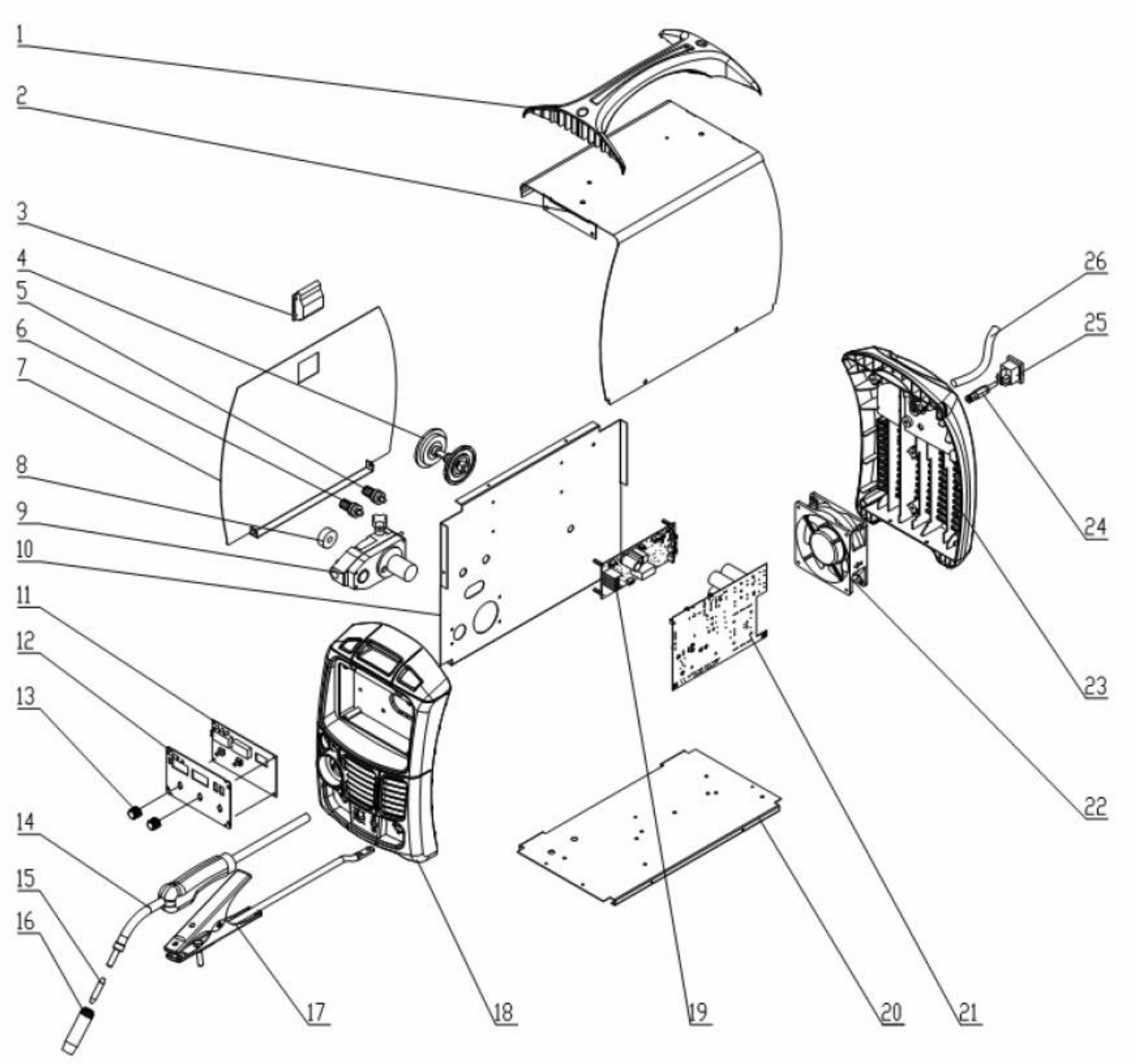

REFERENCE	PART NUMBER	DESCRIPTION	QTY
1	105200255	HANDLE	1
2	165200026	ENCLOSURE	1
	165200028	MATCO WELDER HELP LABEL	1
	105200041	WARNING LABEL MIG	1
3	105200080	DOOR LATCH	1
4	105200009	WIRE SPOOL HOLDER	1
5	105200242	WELD OUTPUT CONNECTOR - POSITIVE	1
6	105200241	WELD OUTPUT CONNECTOR - NEGATIVE	1
7	165200027	DOOR	1
	165200033	WELD SET-UP CHART MPM175DVI	1
8	105200002	DRIVE ROLLER	1
9	105200198	WIRE DRIVE ASSEMBLY	1
10	105200263	CENTER PANEL	1
11	105800042	FRONT PANEL PC BOARD	1
12	105200066	FRONT PANEL SUPPORT	1
	165200034	FRONT NAMEPLATE MPM175DVI	1
13	105200188	POTENTIOMETER KNOB	2
14	105200434	MIG TORCH	1
15	105200043	CONTACT TIP 11-30	1
16	105200062	MIG NOZZLE	1
	105200034	FLUX CORE NOZZLE	1
	105200043	MIG CONTACT TIP ADAPTER	1
17	105200199	GROUND CABLE AND CLAMP	1
	105200042	GROUND CLAMP ONLY	1
18	105500253	FRONT PLASTIC BEZEL	1
19	105200436	CONTROL PC BOARD	1
20	105200054	BOTTOM	1
21	105200438	MAIN PC BOARD	1
22	105200439	FAN	1
23	105200260	BACK PLASTIC BEZEL	1
24	105200266	GAS CONNECTOR	1
25	105200046	POWER SWITCH	1
26	105200442	INPUT POWER CORD	1
	105200212	120V POWER CORD ADAPTER	1
	165200035	OPERATOR'S MANUAL MPM175DVI	1

For replacement parts or technical questions, call **855-920-2399**.

Distributed by

Matco Tool

4403 Allen Road

Stow OH 44224

www.matcotools.com

Made in China to Matco specifications